GENERAL MACHINIST

THEORY

VOCATIONAL EDUCATION

HIGHER SECONDARY - SECOND YEAR

A Publication under
Government of Tamilnadu
Distribution of Free Textbook Programme

(NOT FOR SALE)

Untouchability is a sin

Untouchability is a crime

Untouchability is inhuman

TAMILNADU
TEXTBOOK CORPORATION
College Road, Chennai - 600 006.

© Government of Tamilnadu
First Edition - 2011

Chairperson

Dr. R. RAJKUMAR,

Head of the Department (Mechanical)
AMK Polytechnic College,
Sembarambakkam, Chennai - 602 103.

Authors

G. JAYAKUMAR JESUDOSS,

Vocational Teacher,
Dharmamurthi Rao Bahadur Calavala Cunnan Chetty's
Hindu Higher Secondary School,
Thiruvallur - 602 001.

C. RAVIVARMAN

Vocational Teacher,
Govt. Boys Higher Secondary School,
Nattrampalli,
Vellore Dist - 635 852.

A. VELAYUTHAM

Vocational Teacher,
Govt. Higher Secondary School,
Nemili,
Vellore Dist - 631 051.

B. PRABHAKARAN

Vocational Teacher,
Govt. Boys Higher Secondary School,
Vandavasi,
Thiruvannamalai Dist-604 408.

N. PALANIVELU

Vocational Teacher,
Govt. Boys Higher Secondary School,
Arni,
Thiruvannamalai Dist - 632 301.

This book has been prepared by the Directorate of School Education on behalf of the Government of Tamilnadu

This book has been printed on 60 GSM paper

Printed by Web Offset at :

INDEX

Sl. No.	Title	Page No.
1.	Lathe	1
2.	Drilling machine	43
3.	Shaping machine	70
4.	Grinding machine	94
5.	Milling machine	119
6.	Hydraulic equipments	148
7.	Electrical equipments	173
8.	Welding	181
9.	CNC Machines	201
10.	Machine tool maintenance	215

1. LATHE

1.1 Introduction

Lathe is considered as one of the oldest machine tools and is widely used in industries. It is called as mother of machine tools. It is said that the first screw cutting lathe was developed by an Englishman named Henry Maudslay in the year 1797. Modern high speed, heavy duty lathes are developed based on this machine.

The primary task of a lathe is to generate cylindrical workpieces. The process of machining a workpiece to the required shape and size by moving the cutting tool either parallel or perpendicular to the axis of rotation of the workpiece is known as turning. In this process, excess unwanted metal is removed. The machine tool useful in performing plain turning, taper turning, thread cutting, chamfering and knurling by adopting the above method is known as lathe. *Fig 1.1 shows turning operation.*

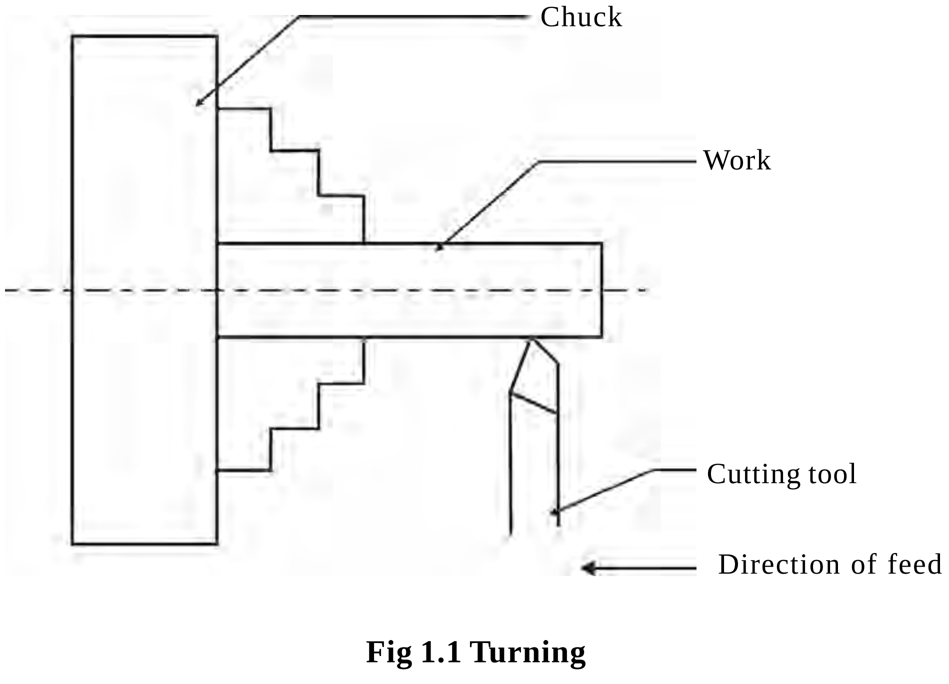

Fig 1.1 Turning

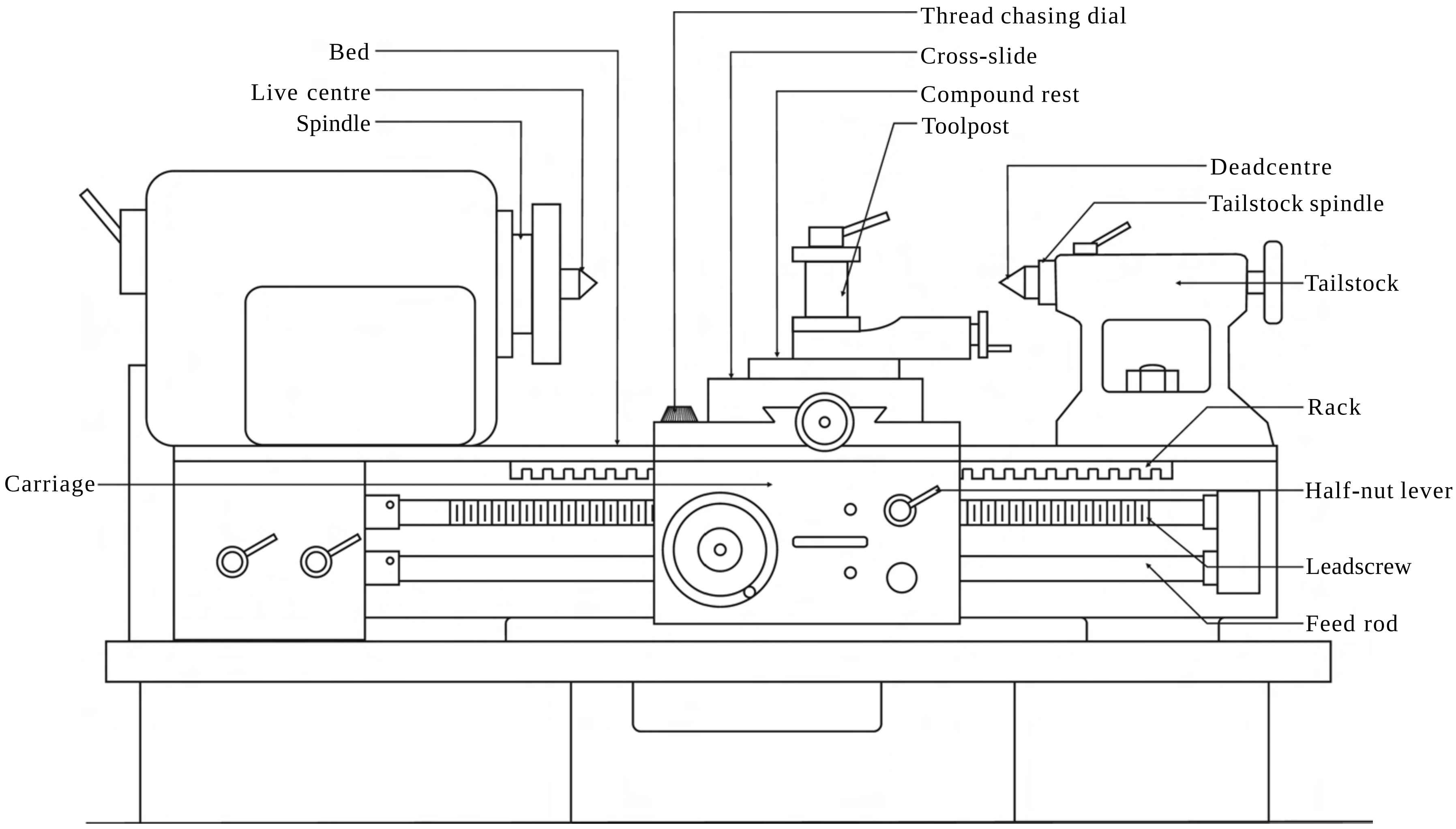

Fig 1.2 Lathe - Parts

1.2 Main parts of a lathe

Every individual part performs an important task in a lathe. Some important parts of a lathe are listed below

1. Bed
2. Headstock
3. Spindle
4. Tailstock
5. Carriage
    a. Saddle
    b. Apron
    c. Cross-slide
    d. Compound rest
    e. Compound slide
    f. Tool post
6. Feed mechanism
7. Leadscrew
8. Feed rod
9. Thread cutting mechanism

Fig 1.2 shows the different parts of a lathe.

1.2.1 Bed

Bed is mounted on the legs of the lathe which are bolted to the floor. It forms the base of the machine. It is made of cast iron and its top surface is machined accurately and precisely. Headstock of the lathe is located at the extreme left of the bed and the tailstock at the right extreme. Carriage is positioned in between the headstock and tailstock and slides on the bed guideways.

The top of the bed has flat or ‘V’ shaped guideways. The tailstock and the carriage slides on these guideways. Inverted ‘V’ shaped guideways are useful in better guide and accurate alignment of saddle and tailstock. The metal burrs resulting from turning operation automatically fall through. Flat bed guideways can be found in older machine tools. It is useful in heavy machines handling large workpieces. But then the accuracy is not high.

1.2.2 Headstock

Headstock is mounted permanently on the inner guideways at the left hand side of the leg bed. The headstock houses a hollow spindle and the mechanism for driving the spindle at multiple speeds. The headstock will have any of the following arrangements for driving and altering the spindle speeds

(i) Stepped cone pulley drive

(ii) Back gear drive

(iii) All gear drive

1.2.3 Spindle

The spindle rotates on two large bearings housed on the headstock casting. A hole extends through the spindle so that a long bar stock may be passed through the hole. The front end of the spindle is threaded on which chucks, faceplate, driving plate and catch plate are screwed. The front end of the hole is tapered to receive live center which supports the work. On the other side of the spindle, a gear known as a spindle gear is fitted. Through this gear, tumbler gears and a main gear train, the power is transmitted to the gear on the leadscrew. *The construction of a lathe spindle is shown in Fig 1.3*

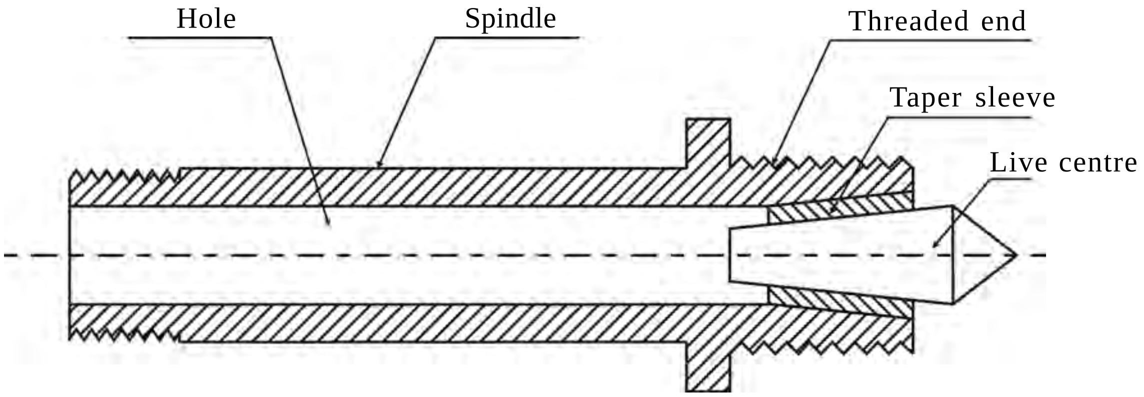

Fig 1.3 Spindle

1.2.4 Tailstock

Tailstock is located on the inner guideways at the right side of the bed opposite to the headstock. The body of the tailstock is bored and houses the tailstock spindle or ram. The spindle moves front and back inside the hole. The spindle has a taper hole to receive the dead centre or shanks of tools like drill or reamer. If the tailstock handwheel is rotated in the clockwise direction, the spindle advances. The spindle will be withdrawn inside the hole, if the handwheel is rotated in anti-clockwise direction.

To remove the dead centre or any other tool from the spindle, the handwheel is rotated in anticlockwise direction further. The movement of the spindle inside the hole may be locked by operating the spindle clamp located on top of the tailstock.In order to hold workpieces of different lengths, the tailstock can be locked at any desired position on the lathe bed. Tailstock clamping bolts and clamping pates are used for this purpose.

Tailstock is designed to function as two units-the base and the body. The base of the tailstock is clamped to the bed. The body is placed on the base and can be made to slide sidewards-perpendicular to the bed guideways upto a certain distance. *Fig 1.4 shows a tailstock.*

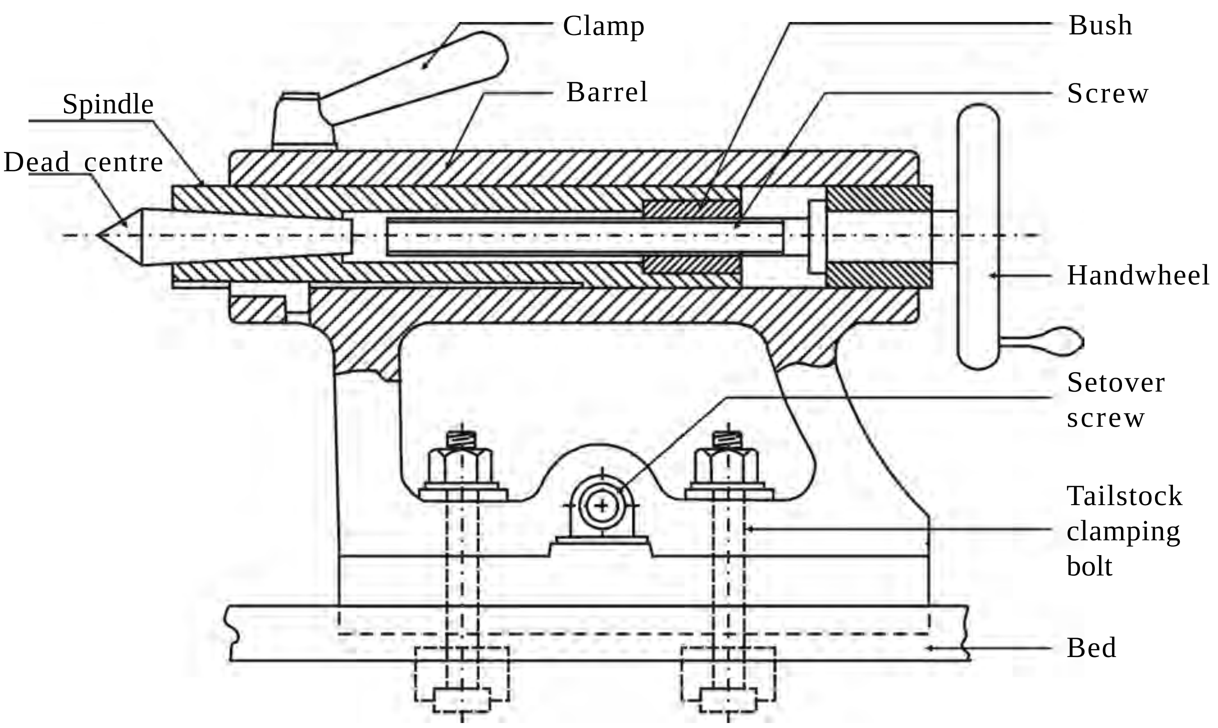

Fig 1.4 Tailstock

The uses of tailstock

1. It supports the other end of the long workpiece when it is machined between centres.

2. It is useful in holding tools like drills, reamers and taps when performing drilling, reaming and tapping.

3. The dead centre is off set by a small distance from the axis of the lathe to turn tapers by set over method.

4. It is useful in setting the cutting tool at correct height aligning the cutting edge with lathe axis.

1.2.5 Carriage

Carriage is located between the headstock and tailstock on the lathe bed guideways. It can be moved along the bed either towards or away from the headstock. It has several parts to support, move and control the cutting tool. The parts of the carriage are :

a) saddle
b) apron
c) cross-slide
d) compound rest
e) compound slide
f) tool post

Different parts of a carriage are shown in Fig 1.5

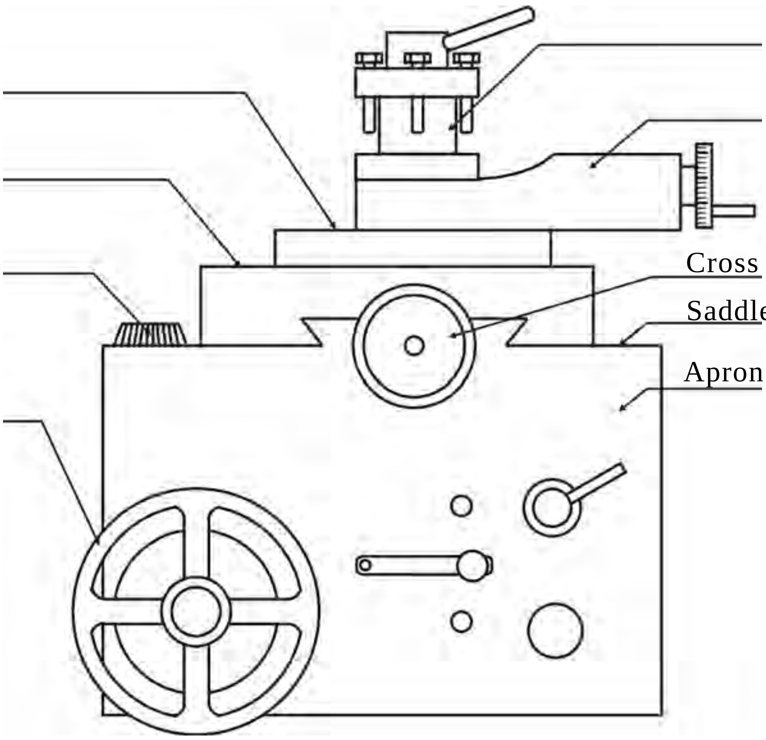

Fig 1.5 Carriage

Saddle:

It is an "H" shaped casting. It connects the pair of bed guideways like a bridge. It fits over the bed and slides along the bed between headstock and tailstock. The saddle or the entire carriage can be moved by providing hand feed or automatic feed.

Cross slide:

Cross-slide is situated on the saddle and slides on the dovetail guideways at right angles to the bed guideways. It carries compound rest, compound slide and tool post. Cross slide handwheel is rotated to move it at right angles to the lathe axis. It can also be power driven. The cross slide hand wheel is graduated on its rim to enable to give known amount of feed as accurate as 0.05mm.

Compound rest:

Compound rest is a part which connects cross slide and compound slide. It is mounted on the cross-slide by tongue and groove joint. It has a circular base on which angular graduations are marked. The compound rest can be swiveled to the required angle while turning tapers. A top slide known as compound slide is attached to the compound rest by dove tail joint. The tool post is situated on the compound slide.

Tool post:

This is located on top of the compound slide. It is used to hold the tools rigidly. Tools are selected according to the type of operation and mounted on the tool post and adjusted to a convenient working position. There are different types of tool posts and they are:

1. Single screw tool post
2. Four bolt tool post
3. Four way tool post
4. Open side tool post

Single screw tool post

The tool is held by a screw in this toolpost. It consists of a round bar with a slotted hole in the centre for fixing the tool by means of a setscrew. A concave ring and a convex rocker are used to set the height of the tool point at the right position. The tool fits on the flat top surface of the rocker. The tool post is not rigid enough for heavy works as only one clamping screw is used to clamp the tool. *A single screw toolpost is illustrated in Fig 1.6*

Four way tool post

This type of tool post can accommodate four tools at a time on the four open sides of the post. The tools are held in position by separate screws and a locking bolt is located at the centre. The required tool may be set for machining by swiveling the tool post. Machining can be completed in a shorter time because the required tools are pre-set.

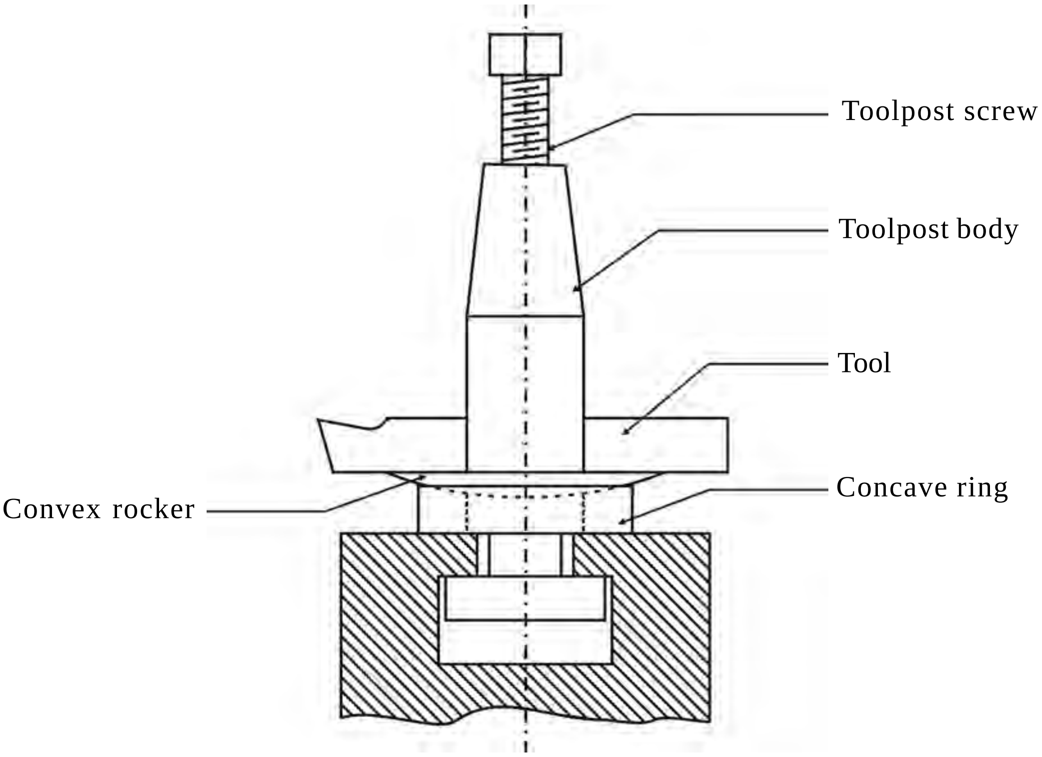

Fig 1.6 Single screw toolpost

1.2.6 Feed mechanism

There are several mechanisms to make the carriage and crose-slide move automatically and to change the direction of their movement. Some important mechanisms are dealt with as follows.

Tumbler gear arrangement

Tumbler gears are located in the headstock just below the spindle gear. For the purpose of moving the carriage towards or away from the headstock, this mechanism along with feed rod or leadscrew is used.

Tumbler gears are two small pinions mounted on a bracket. This bracket is pivoted about the axis of the stud gear. The position of the bracket can be arranged in three different stages namely i) neutral ii) forward & iii) reverse. Hence, the direction of rotation of the leadscrew and the feed rod is reversed.

Neutral position

When the bracket is held in neutral position, both the tumbler gears A and B stand disengaged from the spindle gear and main gear train. And so carriage will not get any movement.

Forward position

When the bracket is arranged in the forward position as shown in the diagram, only one of the tumbler gears(B) comes between the spindle gear and the main gear train. In that position, the leadscrew or the feed rod rotates in the direction of the headstock spindle rotation. The carriage moves towards the headstock providing the cutting tool with longitudinal feed.

Reverse position

When the bracket is arranged in the reverse position, both the tumbler gears come in contact between the spindle gear and the main gear train. The carriage moves towards the tailstock to give the tool the longitudinal feed in the opposite direction.

Tumbler gear arrangement is shown in Fig 1.7

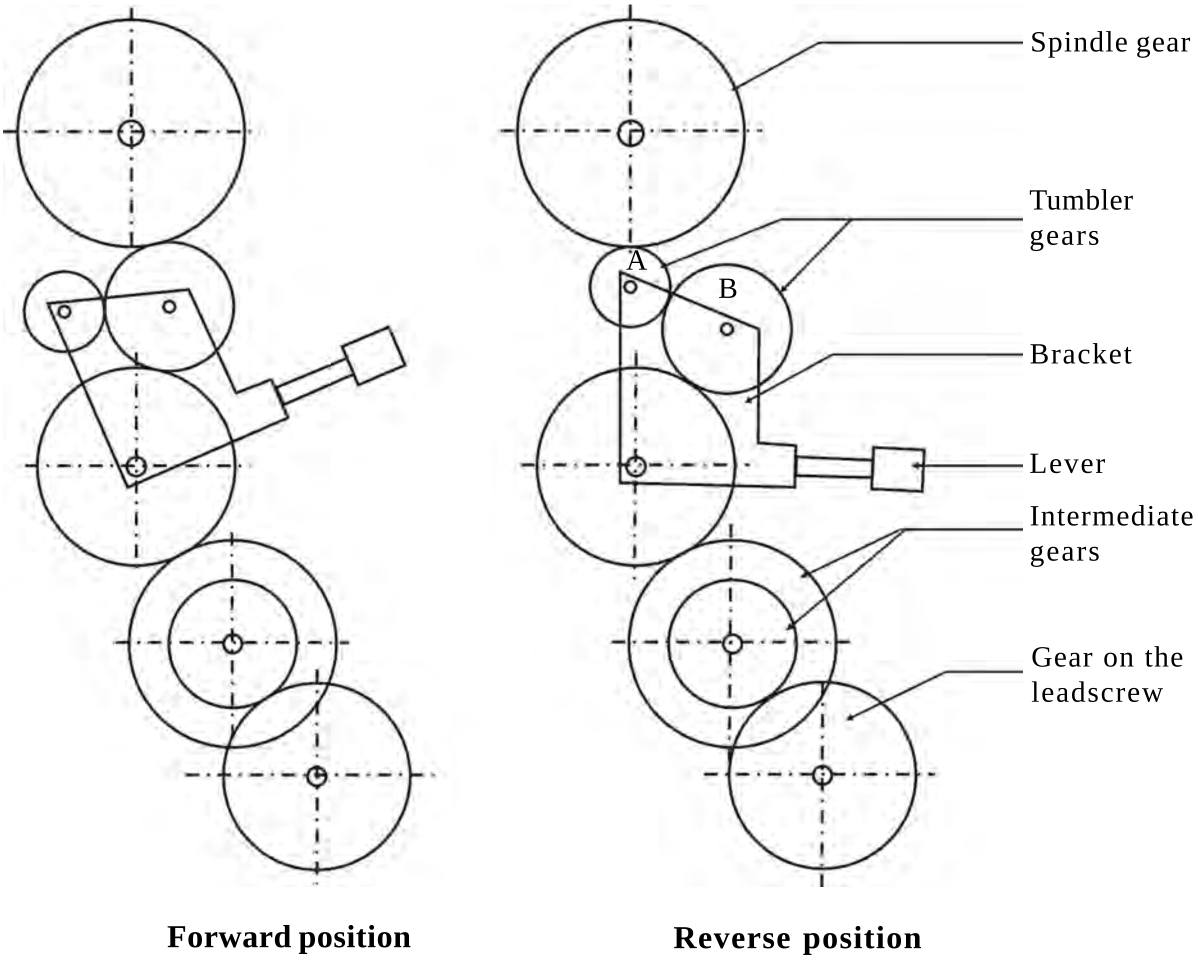

Fig 1.7 Tumbler gear arrangement

Apron Mechanism:

Apron is attached to the carriage and hangs over the front side of the lathe bed. It is useful in providing power and hand feed to both carriage and cross-slide. It is also used to provide power feed to the carriage during thread cutting through two half nuts. *The construction of apron is shown in Fig 1.8*

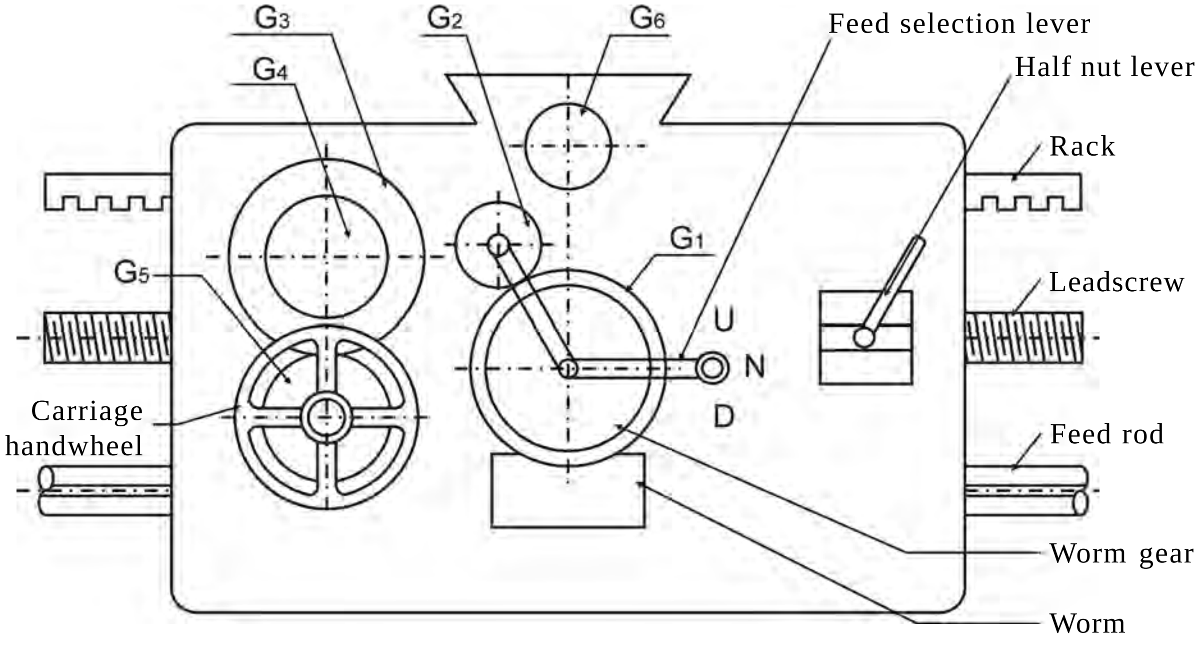

Fig 1.8 Apron of a lathe

Construction

Power is transmitted from the spindle to the leadscrew and feed rod through the spindle gear and tumbler gear arrangement. A worm is mounted on the feed rod by a sliding key. The worm meshes with a worm gear on whose axis another gear G1 is attached. Gear G1 is attached to a small gear G2 by a bracket as shown in the diagram. Gear G4 is positioned to be in mesh with the rack gear always. Another gear G3 is mounted on the same axis of gear G4. The carriage handwheel meant for longitudinal feed is attached to the gear G5 on the same axis. The gears G3 and G5 are always in mesh. The gear G6 is attached to the cross slide screw.

The feed selection lever can be kept in neutral, up and down positions to obtain the following movements.

1. Hand feed and power feed to the carriage
2. Hand feed and power feed to the cross slide

Hand feed to the carriage

Feed selection lever is kept in neutral position and the carriage handwheel is rotated. The gear G4 attached to the rack gets rotation through the gears G5 and G3. The carriage moves longitudinally.

Power feed to the carriage

When feed selection lever is kept in up position (U), the gear G2 will mesh with gear G3. Gear G4 gets rotation through gear G3 and the carriage gets automatic (power) feed.

Hand feed to the cross slide

Feed selection lever is kept in neutral position. The cross slide will move on rotation of the cross slide handwheel.

Power feed to the cross slide

When the feed selection lever is kept in down position (D), gear G2 will be in contact with gear G6. The rotation of G6 will make the cross slide screw also to rotate and the cross-slide moves automatically.

Power feed to the carriage for thread cutting

When the two half nuts in the apron are made as one unit, leadscrew makes the carriage to move automatically and cut threads of required pitch value.

1.2.7 Leadscrew

The leadscrew is a long threaded shaft used as master screw. It is brought into operation during thread cutting to move the carriage to a calculated distance. Mostly leadscrews are Acme threaded.

The leadscrew is held by two bearings on the face of the bed. A gear is attached to the lead screw and it is called as gear on leadscrew. A half nut lever is provided in the apron to engage half nuts with the leadscrew.

Leadscrew is used to move the carriage towards and away from the headstock during thread cutting. The direction of carriage movement depends upon the direction of rotation of the leadscrew.When the leadscrew is kept stationary, the half nuts are engaged with the leadscrew to keep the carriage locked at the required position.

1.2.8 Feed rod

Feed rod is placed parallel to the leadscrew on the front side of the bed. It is a long shaft which has a keyway along its length. The power is transmitted from the spindle to the feed rod through tumbler gears and a gear train. It is useful in providing feed movement to the carriage except for thread cutting and to move cross-slide. A worm mounted on the feed rod enables the power feed movements.

1.3 Spindle mechanism

The spindle is located in the headstock and it receives the driving power from the motor. The spindle speed should be changed to suit different machining conditions like type of material to be cut, the diameter and the length of the work, type of operation, the type of cutting tool material used, the type of finish desired and the capacity of the machine. In order to change the spindle speeds, any one of the following methods are employed.

1. Step cone pulley drive
2. Back geared drive
3. All geared drive

1.3.1. Step cone pulley drive

It is simple in construction. The belt is arranged on the four different steps of the cone pulley to obtain four different speeds.

A step cone pulley is attached with the spindle contained within the headstock casting. The cone pulley has four steps (A, B, C & D). Another cone pulley having four steps (E, F, G and H) is placed parallel to the spindle cone pulley. Both the cone pulleys are connected by a flat belt. The belt can be arranged between the steps A & H, B & G, C & F and D & E. The cone pulley at the bottom is connected to the electric motor by a 'V'belt. So the cone pulley at the bottom rotates at a particular speed.

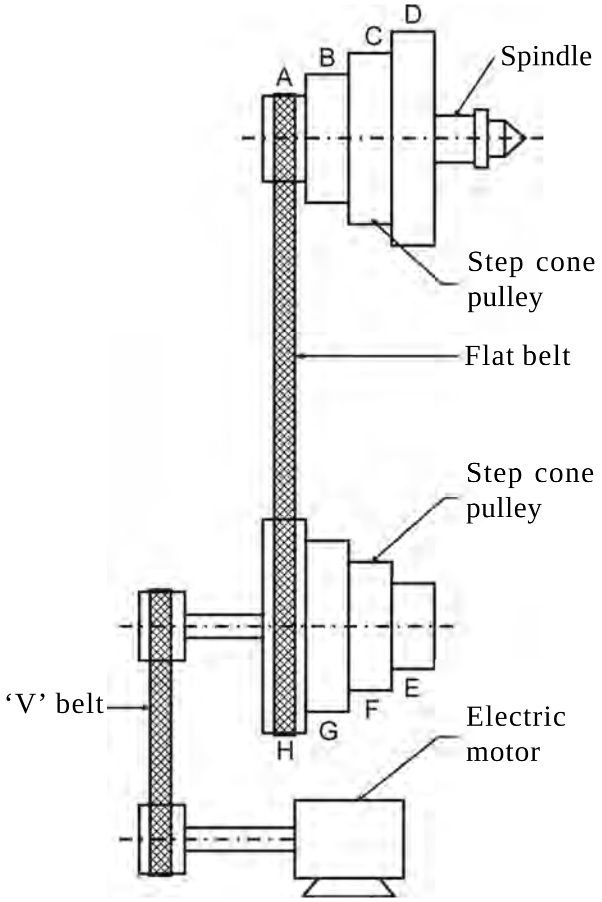

Fig 1.9 Step cone pulley drive

The belt is arranged on any of the four steps to obtain different spindle speeds. The spindle speed is increased if the belt is placed on the smaller step of the driven pulley. The spindle speed will be maximum when the belt is arranged between A & H and the speed will be minimum when the belt is arranged between D & E. *Step cone pulley drive is illustrated in Fig 1.9*

1.3.2 Back gear mechanism

Back gear mechanism is housed within the headstock of the lathe. A step cone pulley having steps ABCD and a small pinion 'P' are mounted on the spindle and rotates freely on it. The gear 'S' is keyed to the headstock spindle. So, the spindle will rotate only when the gear 'S' rotates.

The step conepulley ABCD and the gear 'S' can be kept seperately or made as one unit with the help of a pin 'T'. When the pin is disengaged, the conepulley along with the gear P will rotate freely on the spindle and the spindle will not rotate. There is another shaft parallel to the spindle axis having back gears Q and R mounted on it. These back gears can be made to mesh with gears P and S or kept disengaged from them. The spindle can get drive either from the cone pulley or through back gears.

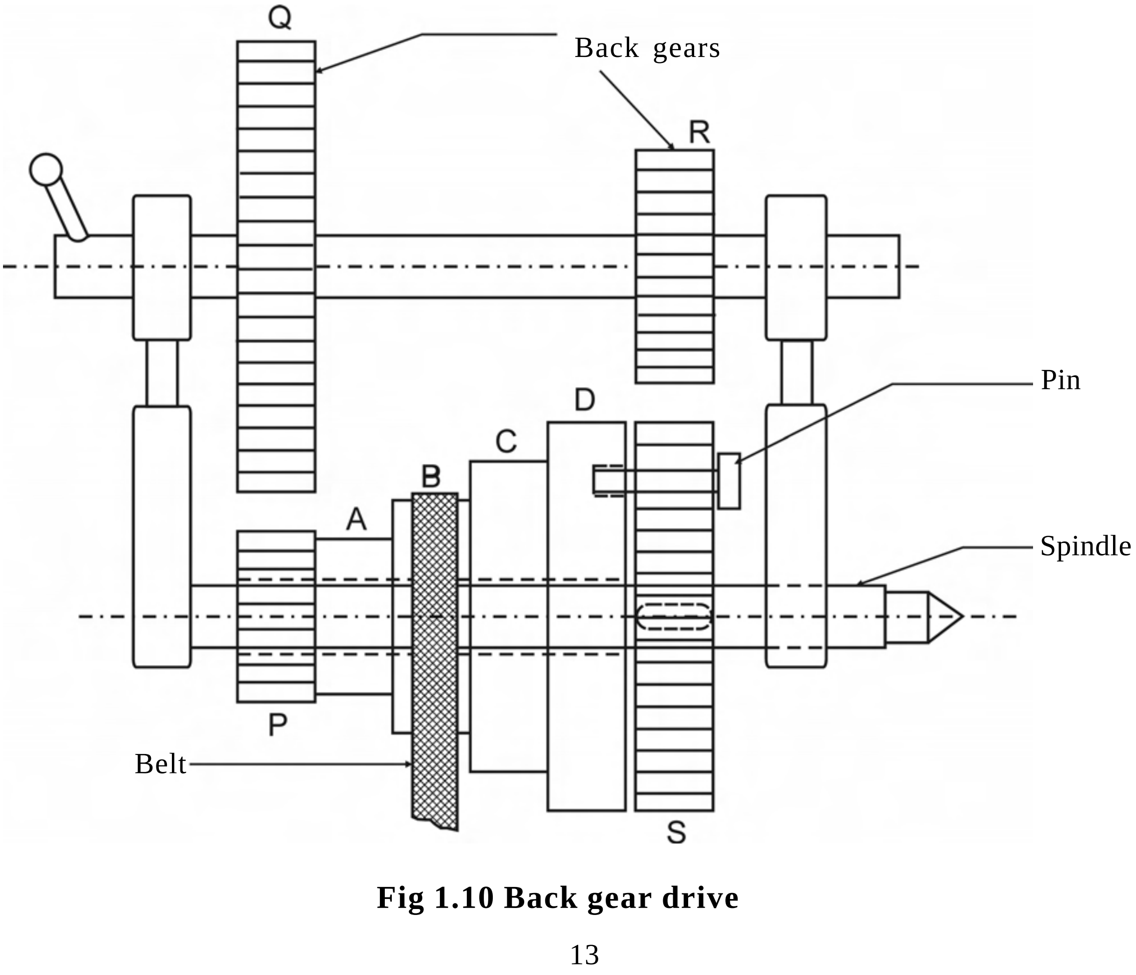

Fig 1.10 Back gear drive

Drive from step conepulley

When the spindle gets drive from the conepulley, the backgears Q and R are disengaged from the gears P and S. The pin 'T' is engaged with conepulley. The belt can be arranged on the steps A,B,C or D to get four different direct speeds for the spindle.

Back gear drive is illustrated in Fig 1.10

Drive through back gears

Back gears Q and R are engaged with gears P and S. The pin 'T' is disengaged from the conepulley to make the conepulley and the spindle separate units. When the conepulley gets drive through the belt, the power is transmitted through the gears P,Q and R to the gear S. Because of number of teeth on these gears, the spindle rotates at slower speeds. By arranging the belt on the different steps of the conepulley, four different spindle speeds are obtained.

Uses of back gear arrangement

1. The spindle gets four direct speeds through the conepulley and four slower speeds through the back gears.

2. Slower speeds obtained by this arrangement are useful when turning on larger workpieces and cutting coarse threads.

1.3.3 All geared headstock

Modern lathes are equipped with all geared headstocks to obtain different spindle speeds quickly. Casting of the all geared headstock has three shafts(1,2& 3) mounted within it. The intermediate shaft(2) has got three gears D, E and F as a single unit and rotate at the same speeds. The splined shaft(1) which is above the intermediate shaft has got three gears A, B and C mounted on it by keys. These three gears can be made to slide on the shaft with the help of a lever. This movement enables the gear A to have contact with the gear D or the gear B with gear E or the gear C with the gear F.

Likewise the spindle shaft(3) which is also splined has three gears G, H and I. With the help of a lever, these three gears can be made to slide on the shaft. This sliding movement enables the gear G to have contact with gear D or the gear H with the gear E or the gear I with the gear F. By altering the positions of the six gears namely A, B, C, G, H and I the following arrangements can be made within the headstock. Nine different spindle speeds are obtained. *All geared drive is shown in Fig 1.11*

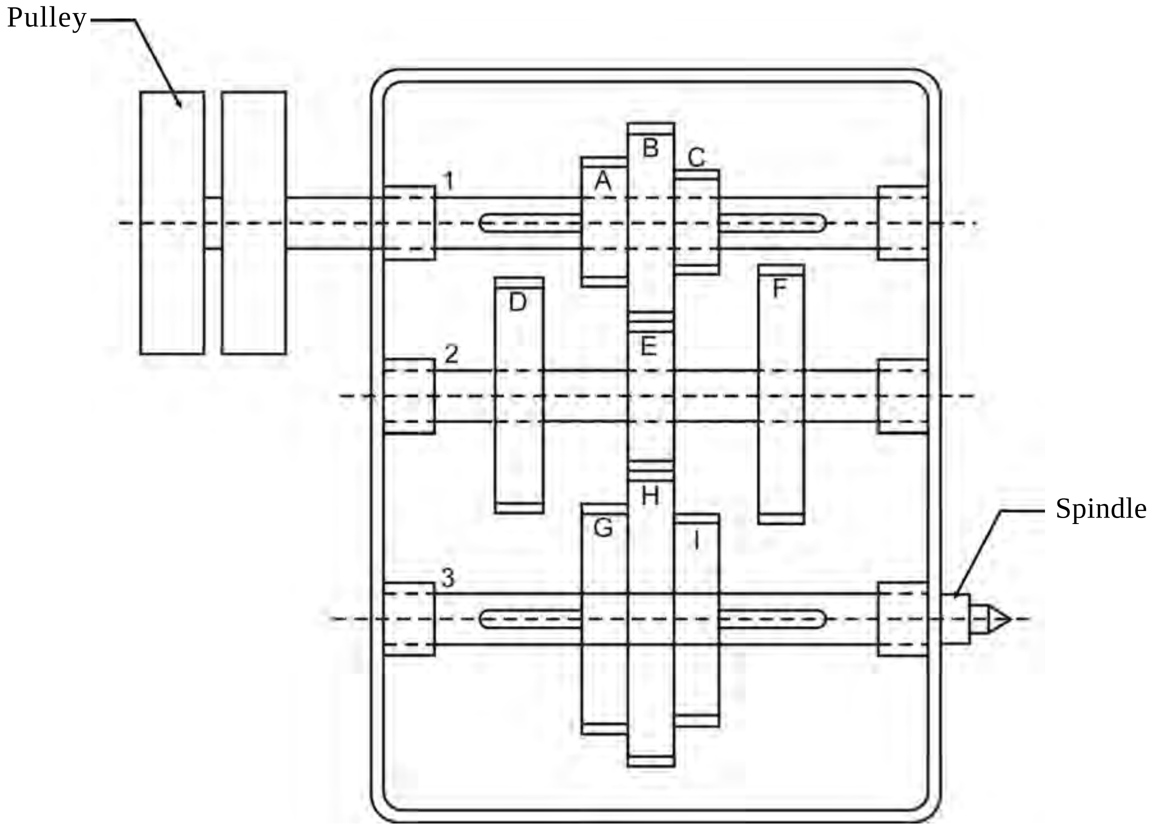

Fig 1.11 All geared drive

The gear combinations are

1. $\frac{A}{D} \times \frac{D}{G}$	4. $\frac{B}{E} \times \frac{D}{G}$	7. $\frac{C}{F} \times \frac{D}{G}$
2. $\frac{A}{D} \times \frac{E}{H}$	5. $\frac{B}{E} \times \frac{E}{H}$	8. $\frac{C}{F} \times \frac{E}{H}$
3. $\frac{A}{D} \times \frac{F}{I}$	4. $\frac{B}{E} \times \frac{F}{I}$	9. $\frac{C}{F} \times \frac{F}{I}$

1.4 Types of lathe

Various designs and constructions of lathe have been developed to suit different machining conditions and usage. The following are the different types of lathe

1. Speed lathe
    a. Woodworking lathe
    b. Centering lathe
    c. Polishing lathe
    d. Metal spinning lathe

2. Engine lathe
    a. Belt driven lathe
    b. Individual motor driven lathe
    c. Gear head lathe
3. Bench lathe
4. Tool room lathe
5. Semi automatic lathe
    a. Capstan lathe
    b. Turret lathe
6. Automatic lathe
7. Special purpose lathe
    a. Wheel lathe
    b. Gap bed lathe
    c. ‘T’ lathe
    d. Duplicating lathe

1.4.1 Speed lathe

Spindle of a speed lathe operates at very high speeds (approximately at a range of 1200 to 3600 rpm) and so it is named so. It consists of a headstock, a tailstock, a bed and a toolslide only. Parts like leadscrew, feed rod and apron are not found in this type of lathe.

1. Centering lathes are used for drilling center holes.
2. The woodworking lathes are meant for working on wooden planks.
3. Metal spinning lathes are useful in making tumblers and vessels from sheet metal.
4. Polishing of vessels is carried out in polishing lathe.

1.4.2 Engine lathe or centre lathe

Engine lathes are named so because the early lathes were driven by steam engines. As the turning operations are performed by holding the workpiece between two centers, it is also known as centre lathe. Engine lathes are widely used in industries. It consists of parts like headstock, tailstock and carriage. Parts like leadscrew and feed rod which are useful in providing automatic feed are also found in this type of lathe.

1.4.3 Bench lathe

Bench lathe is a small lathe generally mounted on a bench. It consists of all the parts of a engine lathe. It is used for small works like machining tiny and precise parts and parts of measuring instruments.

1.4.4 Tool room lathe

A tool room lathe has similar features of an engine lathe but is accurately built and has wide range of spindle speeds to perform precise operations and different feeds. It is costlier than a centre lathe. This is mainly used for precision works like manufacturing tools, dies, jigs, fixtures and gauges.

1.4.5 Semi automatic lathe

Turret and Capstan lathes are known as semi-automatic lathes. These lathes are used for production work where large quantities of identical workpieces are manufactured. They are called semi-automatic lathes as some of the tasks are performed by the operators and the rest by the machines themselves.

A semi skilled operator can do this at low cost and at shorter time. So, the cost of production is reduced. There are two tool posts in the machine namely four way tool post and rear tool post. Four tools can be mounted on the four way tool post and parting tool is mounted on the rear tool post. The tailstock of an engine lathe is replaced by a hexagonal turret. As many tools may be fitted on the six sides of the turret, different types of operations can be performed on a workpiece without resetting of tools. *The toolheads of a turret lathe and a capstan lathe are illustrated in Fig1.12 & Fig.1.13*

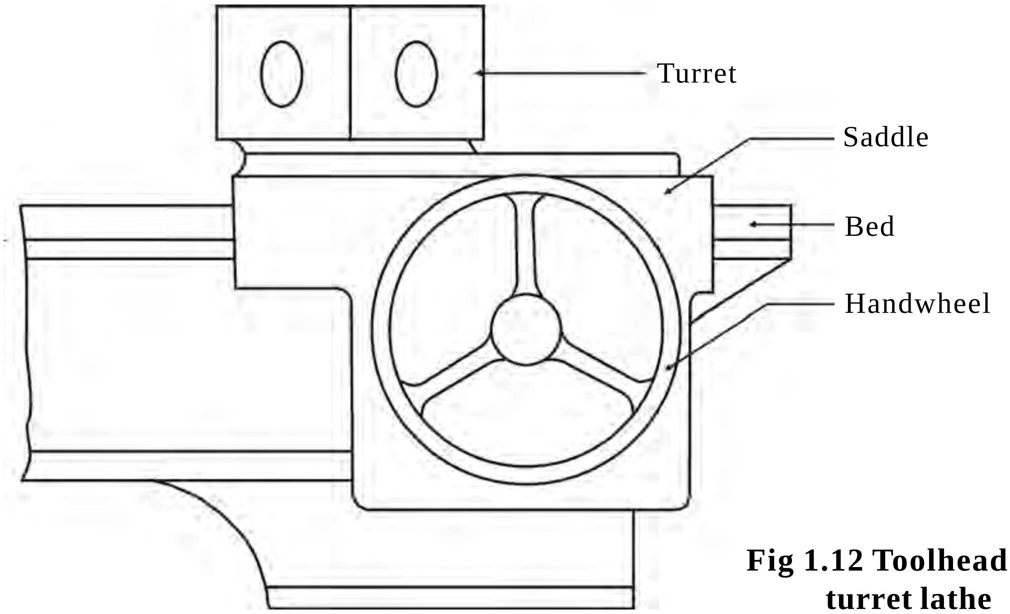

Fig 1.12 Toolhead of a turret lathe

1.4.6 Automatic lathe

Automatic lathes are operated with complete automatic control. They are high speed, mass production lathes. An operator can look after more than one automatic lathe at a time.

1.4.7 Special purpose lathe

Special purpose lathes are used for special purposes and for jobs, which cannot be accommodated and conveniently machined on a standard lathe. Wheel lathe, 'T' lathe, duplicating lathe are some examples of special purpose lathe.

1.4.8 Differences between an engine lathe and a turret & capstan lathe

Engine lathe	Turret & Capstan lathe
1. There is only one tool post	1. There are two tool posts - fourway tool post and rear tool post
2. Tailstock is located at the right side of the bed	2. Tailstock is replaced by an hexagonal tool head called turret
3. Only one cutting tool can be held in the tailstock	3. A minimum of six tools can be held in the turret
4. No provision to control the tool movement (feed) automatically	4. Turret movement can be controlled automatically
5. Only one tool can be put into machining at a time. Tools have to be set everytime according to the operation to be performed	5. More tools can be set on the turret and each of them can be set at the work one by one automatically
6. Setting of tools will take more time	6. Setting of cutting tool is easy
7. A skilled operator is necessary to work on the machine	7. After the initial settings are made, a semi-skilled operator can operate the machine
8. The machine has to be stopped to change the tool	8. Tools can be indexed even when the machine is on
9. The production cost is high	9. Production cost is reduced as the rate of production is more
10. Motors with 3 to 5 HP are used	10. Motors with 15 HP are used

1.4.9 Differences between a turret lathe and a capstan lathe

Turret lathe	Capstan lathe
1. Turret tool head is directly fitted on the saddle and both of them appear like one unit.	1. Turret head is mounted on a slide called ram which is mounted on the saddle
2. Saddle is moved to provide feed to the tool	2. To provide feed to the tool, saddle is locked at a particular point and the ram is moved
3. It is difficult to move the saddle for feed	3. It is easy to move the ram for feed
4. As the saddle can be moved along the entire length of the bed, it is suitable for longer workpieces	4. As the movement of the ram is limited, it is suitable for machining shorter workpieces only
5. To index the turret tool head, a clamping lever is released and the turret is rotated manually	5. When the handwheel for the ram is reversed, the turret tool head is indexed automatically
6. Limit dogs are used to control the distance of tool movement	6. To control the distance of tool movement, feed stop screws are provided at the rear side of the turret
7. Some turret lathes have the facility of moving the turret at right angles to the lathe axis	7. No such facility
8. Heavy and sturdy	8. Lighter in construction
9. Suitable for machining heavy and large workpieces	9. Only small and light workpieces are machined
10. Machining can be done by providing more depth of cut and feed	10. Only limited amount of feed and depth of cut are provided for machining

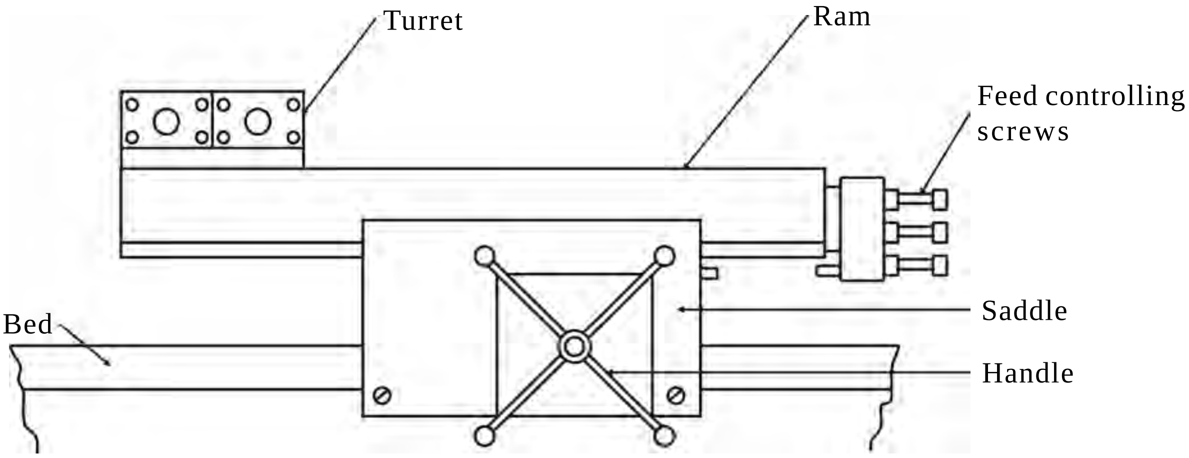

Fig 1.13 Toolhead of a capstan lathe

1.5 Size of a lathe

The size of a lathe is specified by the following points

1. The length of the bed
2. Maximum distance between live and dead centres.
3. The height of centres from the bed
4. The swing diameter

   The swing diameter over bed - It refers to the largest diameter of the work that will be rotated without touching the bed

   The swing diameter over carriage - It is the largest diameter of the work that will revolve over the saddle.

5. The bore diameter of the spindle
6. The width of the bed
7. The type of the bed
8. Pitch value of the lead screw
9. Horse power of the motor
10. Number and range of spindle speeds
11. Number of feeds
12. Spindle nose diameter
13. Floor space required
14. The type of the machine

1.6 Work holding devices used in a lathe

The work holding devices are used to hold and rotate the workpieces along with the spindle. Different work holding devices are used according to the shape, length, diameter and weight of the workpiece and the location of turning on the work. They are

1. Chucks
2. Face plate
3. Driving plate
4. Catchplate
5. Carriers
6. Mandrels
7. Centres
8. Rests

1.6.1 Chucks

Workpieces of short length, large diameter and irregular shapes, which can not be mounted between centres, are held quickly and rigidly in chuck.There are different types of chucks namely, Three jaw universal chuck, Four jaw independent chuck, Magnetic chuck, Collet chuck and Combination chuck.

Three jaw self-centering chuck

The three jaws fitted in the three slots may be made to slide at the same time by an equal amount by rotating any one of the three pinions by a chuck key.This type of chuck is suitable for holding and rotating regular shaped workpieces like round or hexagonal rods about the axis of the lathe. Workpieces of irregular shapes cannot be held by this chuck.

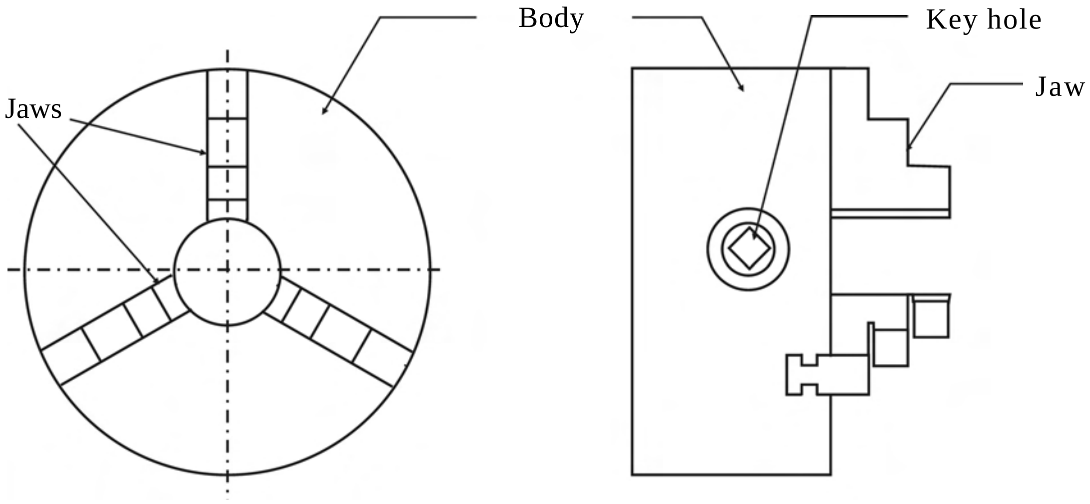

Fig 1.14 Three jaw chuck

The work is held quickly and easily as the three jaws move at the same time. *Fig 1.14 shows a three jaw chuck*

Four jaw independent chuck

There are four jaws in this chuck. Each jaw is moved independently by rotating a screw with the help of a chuck key. A particular jaw may be moved according to the shape of the work. Hence this type of chuck can hold woks of irregular shapes. But it requires more time to set the work aligned with the lathe axis. Experienced turners can set the work about the axis quickly. Concentric circles are inscribed on the face of the chuck to enable quick centering of the workpiece. *A four jaw chuck is illustrated in Fig 1.15*

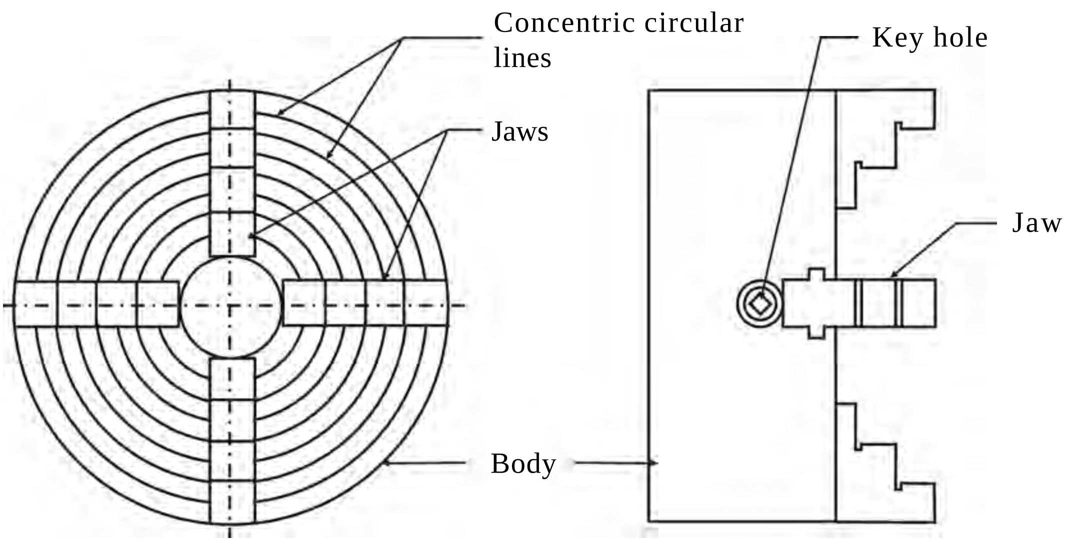

Fig 1.15 Four jaw chuck

Magnetic chuck

The holding power of this chuck is obtained by the magnetic flux radiating from the electromagnet placed inside the chuck. Magnets are adjusted inside the chuck to hold or release the work. Workpieces made of magnetic material only are held in this chuck. Very small, thin and light works which can not be held in a ordinary chuck are held in this chuck. *Fig 1.16 shows a magnetic chuck*

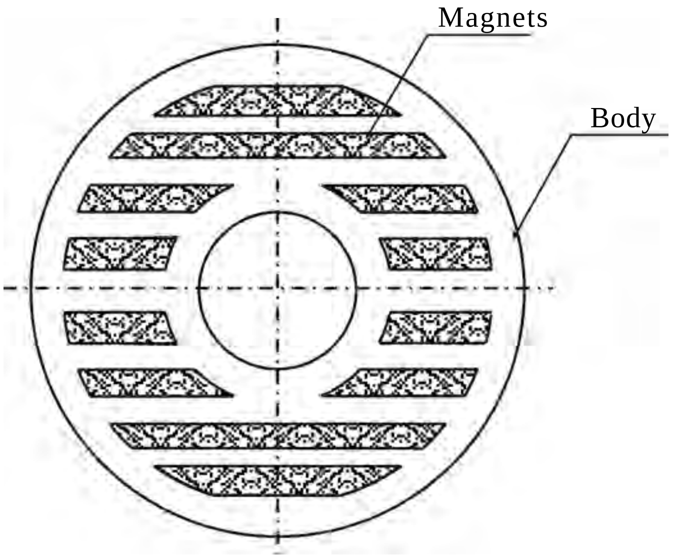

Fig 1.16 Magnetic chuck

Collet chuck

Collet chuck has a cylindrical bushing known as collet. It is made of spring steel and has slots cut lengthwise on its circumference. So, it holds the work with more grip. Collet chucks are used in capstan lathes and automatic lathes for holding bar stock in production work.

A collet chuck is illustrated in Fig 1.17

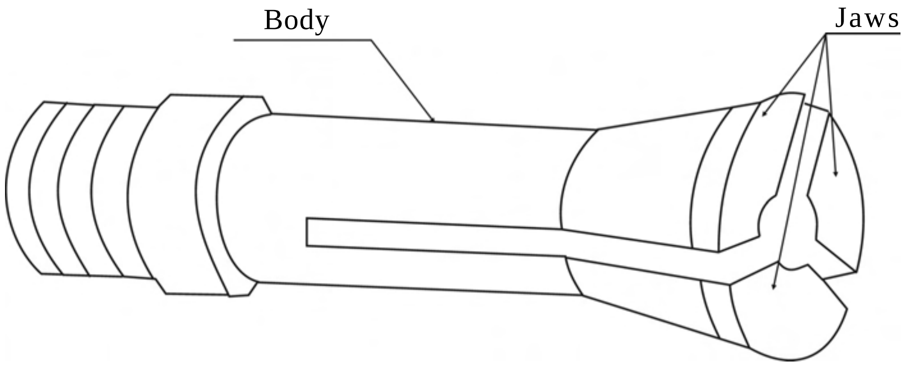

Fig 1.17 Collet chuck

1.6.2 Face plate

Faceplate is used to hold large, heavy and irregular shaped workpieces which can not be conveniently held between centres. It is a circular disc bored out and threaded to fit to the nose of the lathe spindle. It is provided with radial plain and 'T' – slots for holding the work by bolts and clamps.

Fig 1.18 illustrates a face plate.

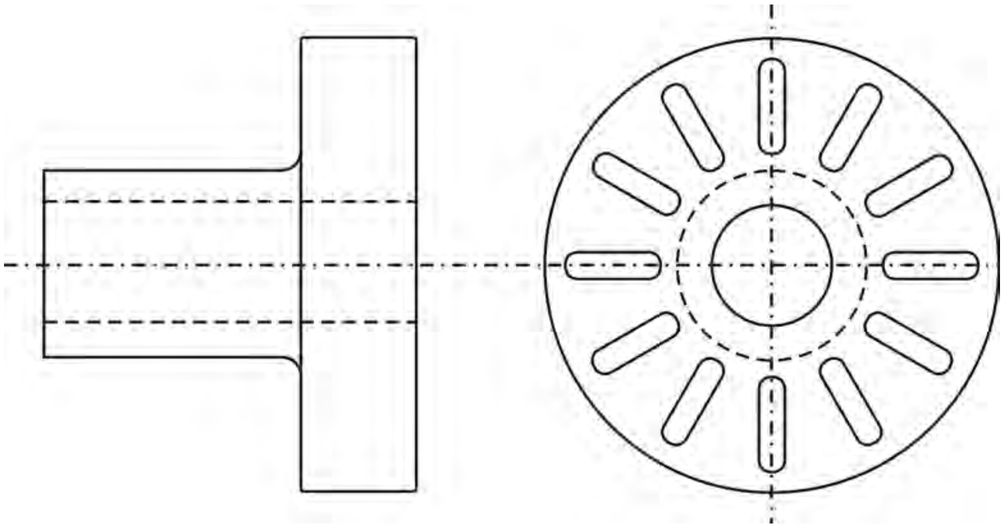

Fig 1.18 Face plate

1.6.3 Driving plate

The driving plate is used to drive a workpiece when it is held between centres. It is a circular disc screwed to the nose of the lathe spindle. It is provided with small bolts or pins on its face. Workpieces fitted inside straight tail carriers are held and rotated by driving plates. *Fig 1.19 shows a driving plate.*

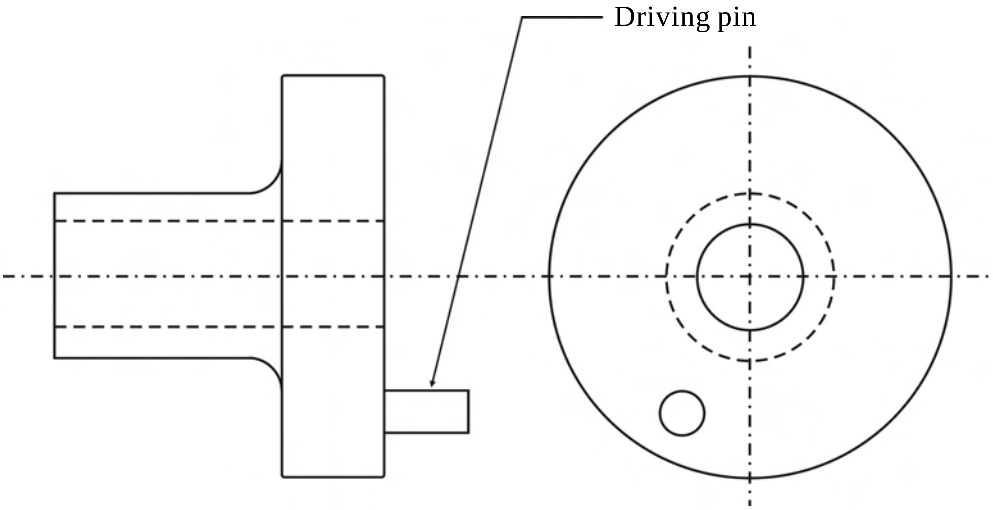

Fig 1.19 Driving plate

1.6.4 Catch plate

When a workpiece is held between centres, the catch plate is used to drive it. It is a circular disc bored and threaded at the centre. Catch plates are designed with 'U' – slots or elliptical slots to receive the bent tail of the carrier. Positive drive between the lathe spindle and the workpiece is effected when the workpiece fitted with the carrier fits into the slot of the catch plate.

Fig 1.20 illustrates a catch plate.

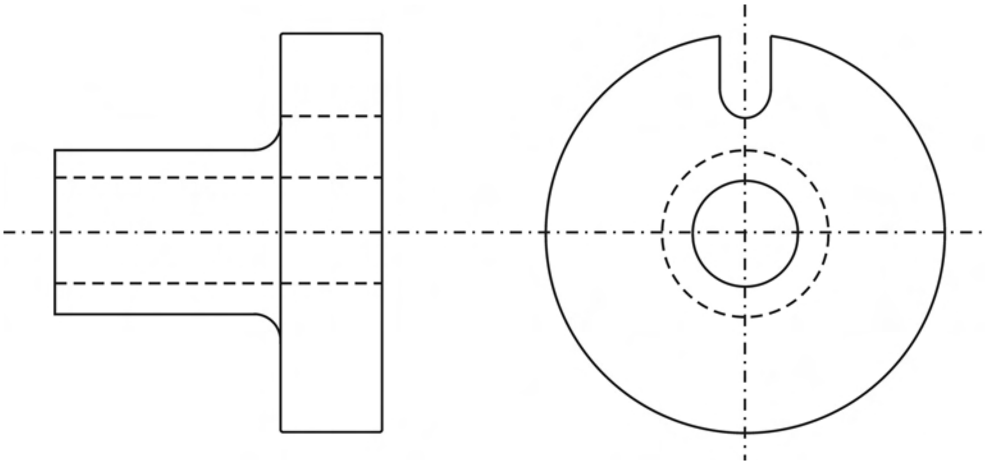

Fig 1.20 Catch plate

1.6.5 Carrier

When a workpiece is held and machined between centres, carriers are useful in transmitting the driving force of the spindle to the work by means of driving plates and catch plates. The work is held inside the eye of the carrier and tightened by a screw. Carriers are of two types and they are :

1. Straight tail carrier 2. Bent tail carrier

Straight tail carrier is used to drive the work by means of the pin provided in the driving plate. The tail of the bent tail carrier fits into the slot of the catch plate to drive the work. *The types of carriers are illustraed in Fig. 1.21*

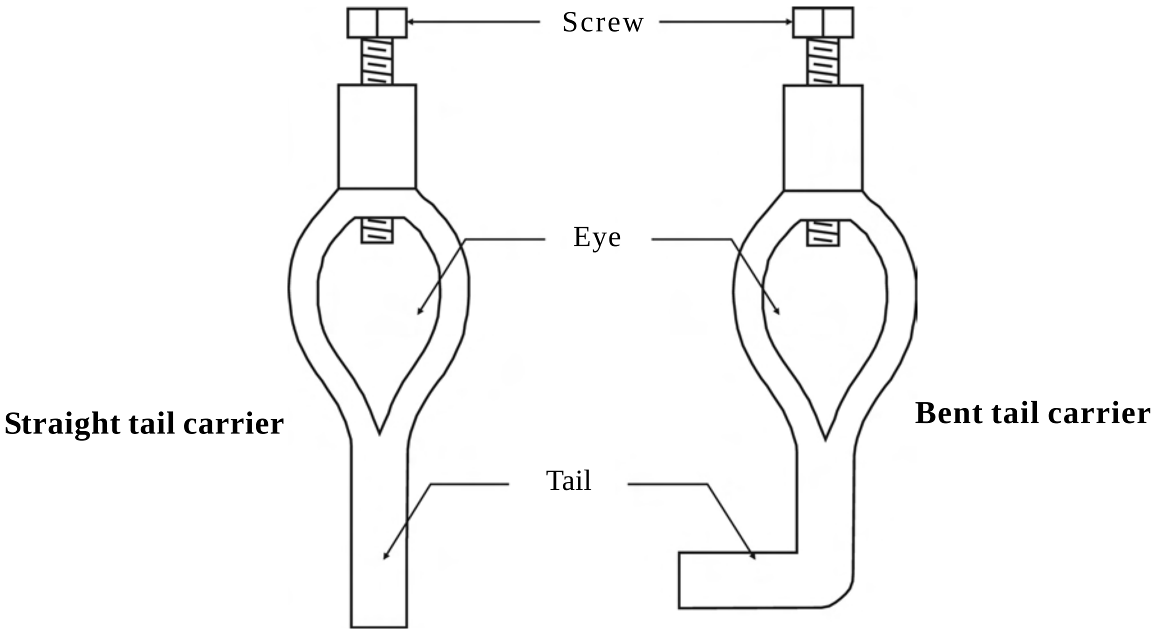

Fig 1.21 Carriers

1.6.6 Mandrel

A previously drilled or bored workpiece is held on a mandrel to be driven in a lathe and machined. There are centre holes provided on both faces of the mandrel. The live centre and the dead centre fit into the centre holes. A carrier is attached at the left side of the mandrel. The mandrel gets the drive either through a catch plate or a driving plate. The workpiece rotates along with the mandrel. There are several types of mandrels and they are:

1. Plain mandrel
2. Step mandrel
3. Gang mandrel
5. Collar mandrel
6. Cone mandrel
7. Expansion mandrel

Plain mandrel

The body of the plain mandrel is slightly tapered to provide proper gripping of the workpiece. The taper will be around 1 to 2mm for a length of 100mm. It is also known as solid mandrel. It is the type mostly commonly used and has wide application. *A plain mandrel is illustrated in Fig 1.22*

Fig 1.22 Plain mandrel

Gang mandrel

It has a fixed collar at one end and a movable collar at the threaded end. This mandrel is used to hold a set of hollow workpieces between the two collars by tightening the nut. *Fig 1.23 shows a gang mandrel.*

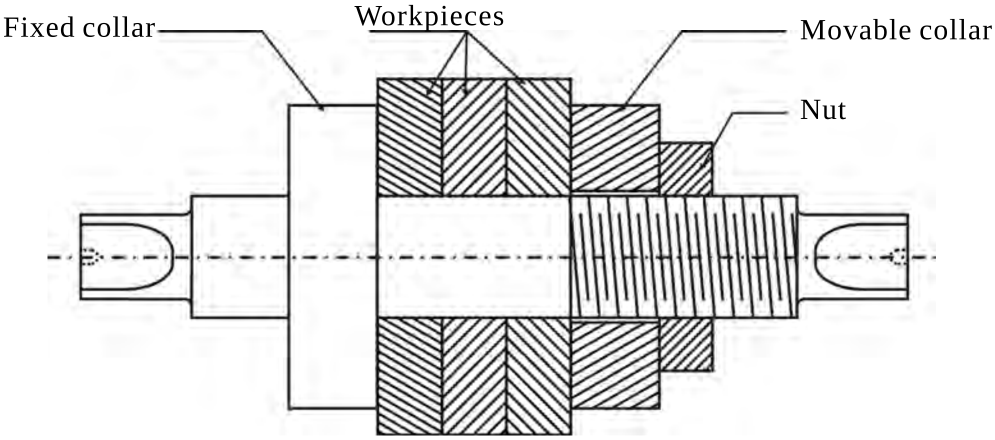

Fig 1.23 Gang mandrel

Screwed mandrel

It is threaded at one end and a collar is attached to it. Workpieces having internal threads are screwed on to it against the collar for machining. *Fig 1.24 shows a screwed mandrel.*

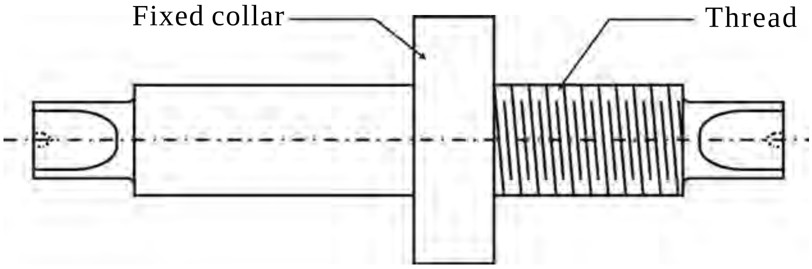

Fig 1.24 Threaded mandrel

Cone mandrel

It consists of a solid cone attached to one end of the body and a sliding cone, which can be adjusted by turning a nut at the threaded end. This type is suitable for driving workpieces having different hole diameters. *A cone mandrel is illustrated in Fig 1.25*

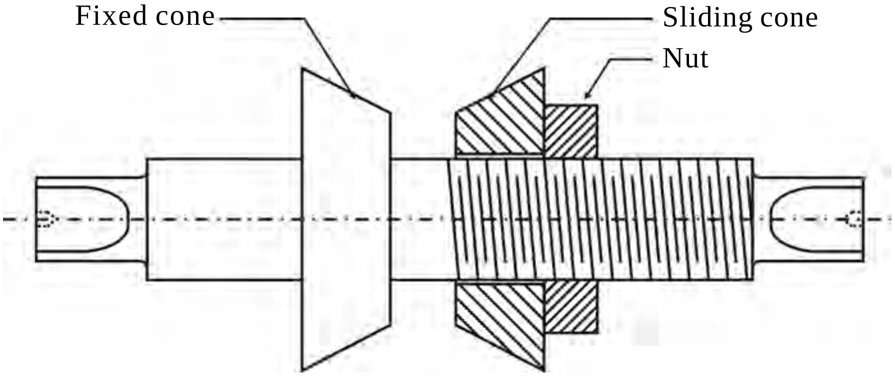

Fig 1.25 Cone mandrel

1.6.7 Centres

Centres are useful in holding the work in a lathe between centres. The shank of a centre has Morse taper on it and the face is conical in shape. There are two types of centres namely

(i) Live centre

(ii) Dead centre

The live centre is fitted on the headstock spindle and rotates with the work. The centre fitted on the tailstock spindle is called dead centre. It is useful in supporting the other end of the work. Centres are made of high carbon steel and hardened and then tempered. So the tip of the centres are wear resistant. Different types of centres are available according to the shape of the work and the operation to be performed. They are

1. Ordinary centre
2. Ball centre
3. Half centre
4. Tipped centre
5. Pipe centre
6. Revolving cenrte
7. Inserted type centre

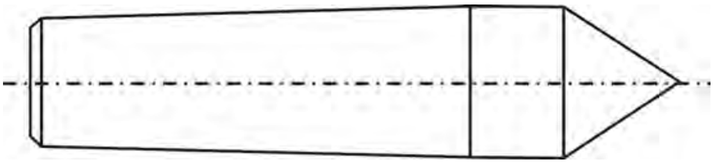

Fig 1.26 Centre

An ordinary centre is shown in Fig. 1.26.

Fig. 1.27 shows the use of different work holding devices.

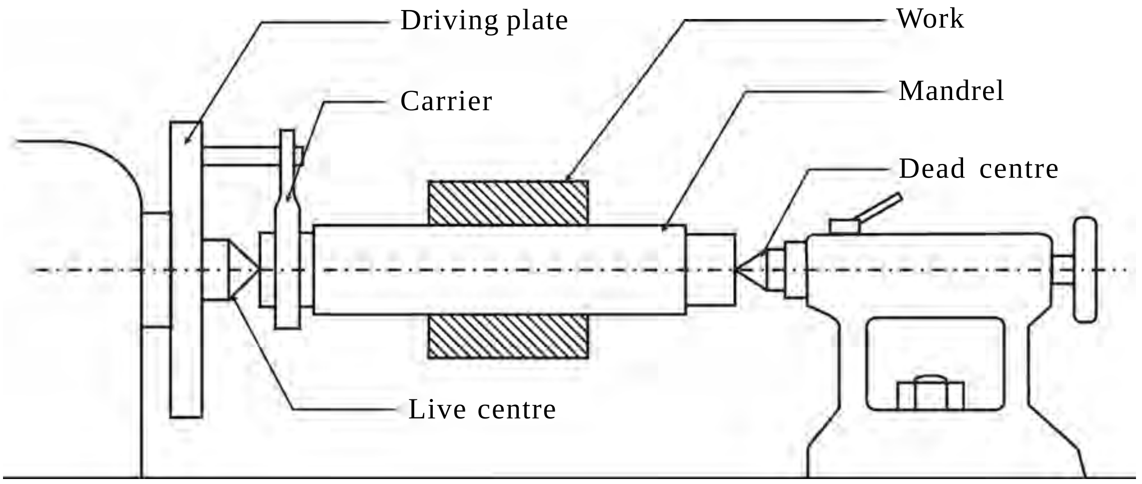

Fig 1.27 Holding a work between centres

1.6.8 Rests

A rest is a mechanical device to support a long slender workpiece when it is turned between centres or by a chuck. It is placed at some intermediate point to prevent the workpiece from bending due to its own weight and vibrations setup due to the cutting force. There are two different types of rests

1. Steady rest
2. Follower rest

Steady rest

Steady rest is made of cast iron. It may be made to slide on the lathe bedways and clamped at any desired position where the workpiece needs support. It has three jaws. These jaws can be adjusted according to the diameter of the work. Machining is done upon the distance starting from the headstock to the point of support of the rest. One or more steady rests may be used to support the free end of a long work. *A steady rest is illustrated in Fig 1.28.*

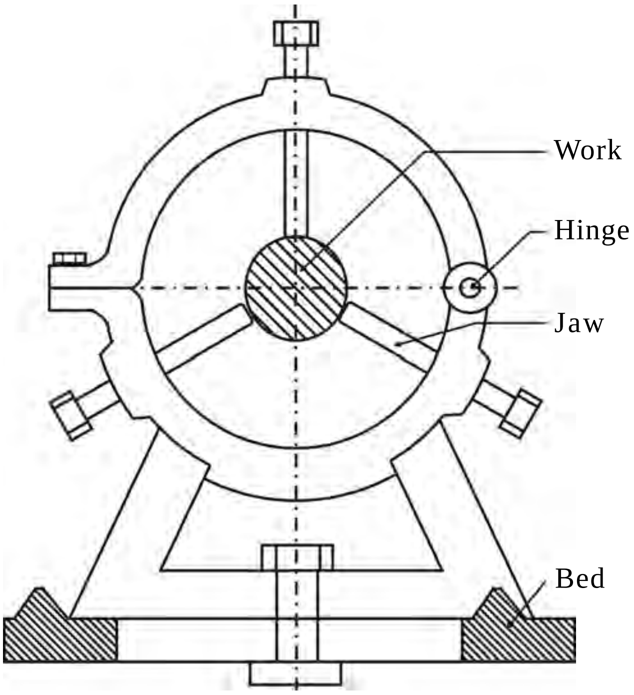

Fig 1.28 Steady rest

Follower rest

It consists of a ‘C’ like casting having two adjustable jaws to support the workpiece. The rest is bolted to the back end of the carriage. During machining, it supports the work and moves with the carriage. So, it follows the tool to give continuous support to the work to be able to machine along the entire length of the work.

In order to reduce friction between the work and the jaws, proper lubricant should be used. *Fig 1.29 shows a follower rest.*

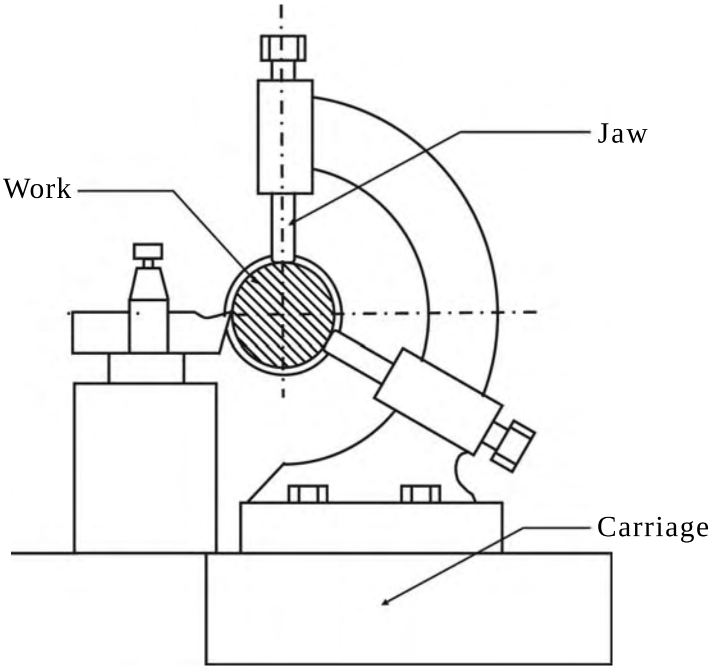

Fig 1.29 Follower rest

1.7 Cutting speed, feed and depth of cut

1.7.1 Cutting speed

The cutting speed is the distance travelled by a point on the outer surface of the work in one minute. It is expressed in meters per minute.

$$\text{Cutting speed} = \frac{\pi dn}{1,000} \text{ m/min.}$$

Where ‘d’ - is the diameter of the work in mm.
‘n’ - is the r.p.m. of the work.

1.7.2 Feed

The feed of a cutting tool in a lathe work is the distance the tool advances for each revolution of the work. Feed is expressed in millimeters per revolution.

1.7.3 Depth of cut

The depth of cut is the perpendicular distance measured from the machined surface to the uncut surface of the workpiece. It is expressed in millimeters.

In a lathe, the depth of cut is expressed as follows

$$\text{Depth of cut} = \frac{d_1 - d_2}{2}$$

Where ‘d_1’ - diameter of the work surface before machining
‘d_2’ - diameter of the machined surface

1.8 Tools used in a lathe

Tools used in a lathe are classified as follows

A. *According to the construction, the lathe tools are classified into three types*

1. Solid tool
2. Brazed tipped tool
3. Tool bit and tool holders

B.*According to the operation to be performed, the cutting tools are classified as*

1. Turning tool
2. Thread cutting tool
3. Facing tool
4. Forming tool
5. Parting tool
6. Grooving tool
7. Boring tool
8. Internal thread cutting tool
9. Knurling tool

C. According to the direction of feed movement, the following tools are used

1. Right hand tool
2. Left hand tool
3. Round nose tool

Some types of lathe tools are illustrated in Fig. 1.30

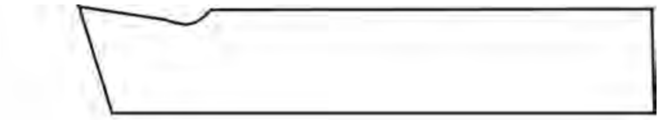

Solid tool

Tipped tool

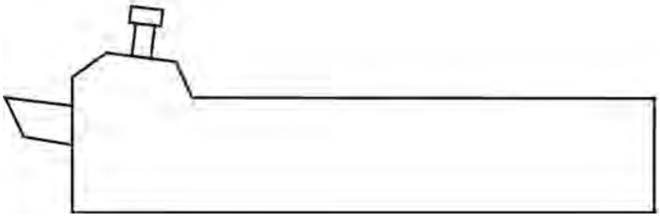

Tool holder and tool bit

Fig 1.30 Types of tools

1.9 Operations performed in a lathe

Various operations are performed in a lathe other than plain turning. They are

1. Facing
2. Turning
    a. Straight turning
    b. Step turning
3. Chamfering
4. Grooving
5. Forming
6. Knurling
7. Undercutting
8. Eccentric turning
9. Taper turning
10. Thread cutting
11. Drilling
12. Reaming
13. Boring
14. Tapping

1.9.1 Facing

Facing is the operation of machining the ends of a piece of work to produce flat surface square with the axis. The operation involves feeding the tool perpendicular to the axis of rotation of the work. *Facing operation is illustrated in Fig. 1.31*

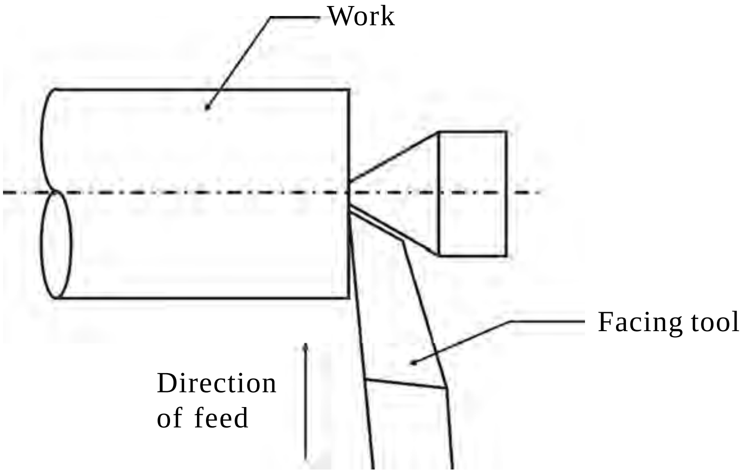

Fig 1.31 Facing

1.9.2 Turning

Turning in a lathe is to remove excess material from the workpiece to produce a cylindrical surface of required shape and size. *Straight turning operation is illustrated in Fig. 1.32*

Straight turning

The work is turned straight when it is made to rotate about the lathe axis and the tool is fed parallel to the lathe axis. The straight turning produces a cylindrical surface by removing excess metal from the workpieces.

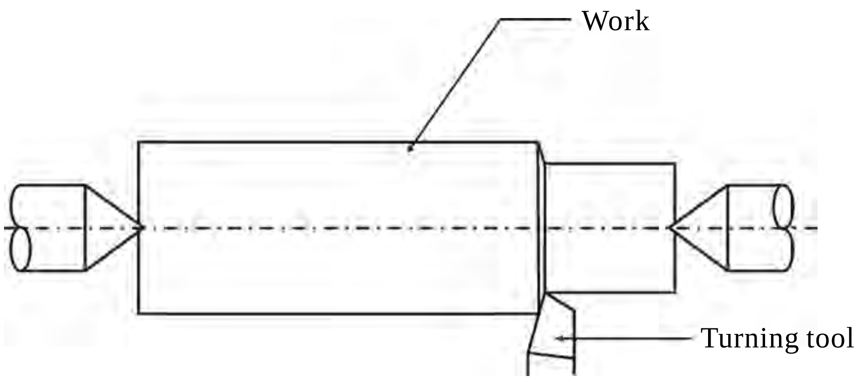

Fig 1.32 Straight turning

Step turning

Step turning is the process of turning different surfaces having different diameters. The work is held between centres and the tool is moved parallel to the axis of the lathe. It is also called shoulder turning.

1.9.3 Chamfering

Chamfering is the operation of bevelling the extreme end of the workpiece. The form tool used for taper turning may be used for this purpose. Chamfering is an essential operation after thread cutting so that the nut may pass freely on the threaded workpiece. *Chamfering is shown in Fig. 1.33*

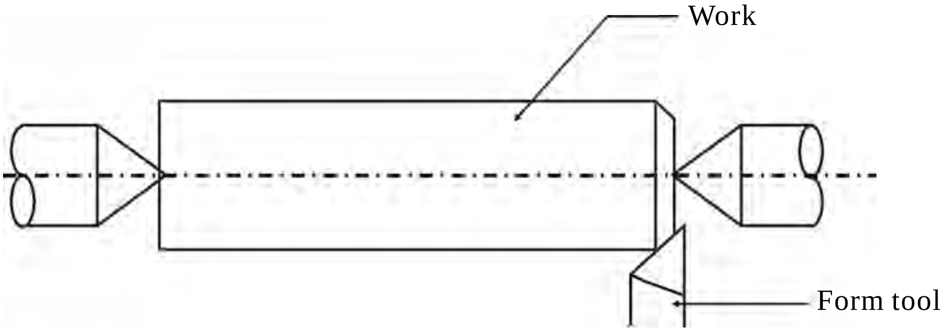

Fig 1.33 Chamfering

1.9.4 Grooving

Grooving is the process of cutting a narrow goove on the cylindrical surface of the workpiece. It is often done at end of a thread or adjacent to a shoulder to leave a small margin. The groove may be square, radial or bevelled in shape. *Different types of grooves are shown in Fig. 1.34*

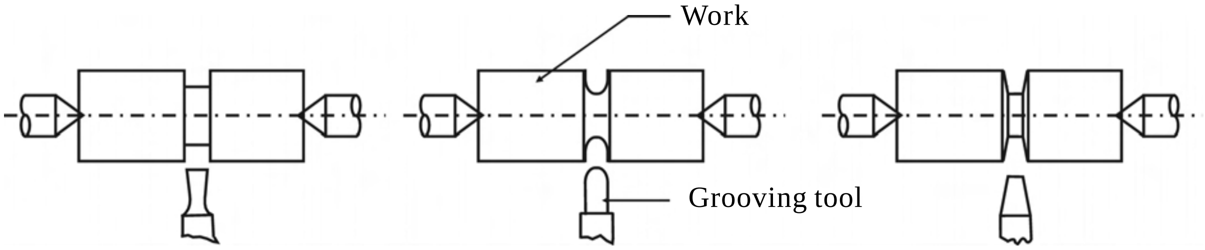

Fig 1.34 Grooving

1.9.5 Forming

Forming is a process of turning a convex, concave or any irregular shape. For turning a small length formed surface, a forming tool having cutting edges conforming to the shape required is fed straight into the work.

1.9.6 Knurling

Knurling is the process of embossing a diamond shaped pattern on the surface of the workpiece. The knurling tool holder has one or two hardened steel rollers with edges of required pattern. The tool holder is pressed against the rotating work. The rollers emboss the required pattern. The tool holder is fed automatically to the required length.

Knurls are available in coarse, medium and fine pitches. The patterns may be straight, inclined or diamond shaped. *Fig. 1.35 shows the operation of knurling.*

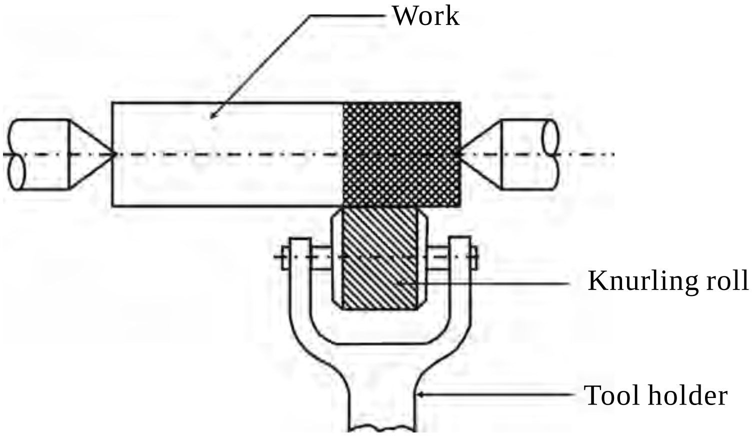

Fig 1.35 Knurling

The purpose of knurling is

1. to provide an effective gripping surface
2. to provide better appearance to the work
3. to slightly increase the diameter of the work

1.9.7 Undercutting

Undercutting is done

(i) at the end of a hole

(ii) near the shoulder of stepped cylindrical surfaces

(iii) at the end of the threaded portion in bolts

It is a process of enlarging the diameter if done internally and reducing the diameter if done externally over a short length. It is useful mainly to make fits perfect. Boring tools and parting tools are used for this operation.

Fig. 1.36 shows the operation of undercutting.

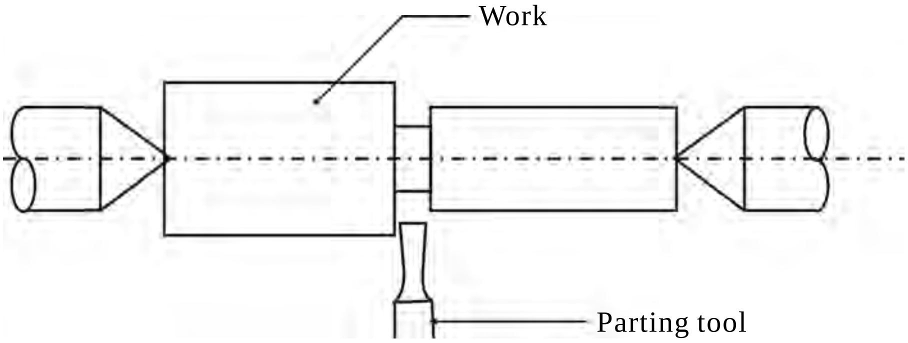

Fig 1.36 Undercutting

1.9.8 Eccentric turning

If a cylindrical workpiece has two separate axes of rotating, one being out of centre to the other, the workpiece is termed as eccentric and turning of different surfaces of the workpiece is known as eccentric turning. *Eccentric turning is shown in Fig. 1.37.* The distance between the axes is known as offset. Eccentric turning may also be done on some special machines. If the offset distance is more, the work is held by means of special centres. If the offset between the centres is small, two sets of centres are marked on the faces of the work. The work is held and rotated between each set of centres to machine the eccentric surfaces.

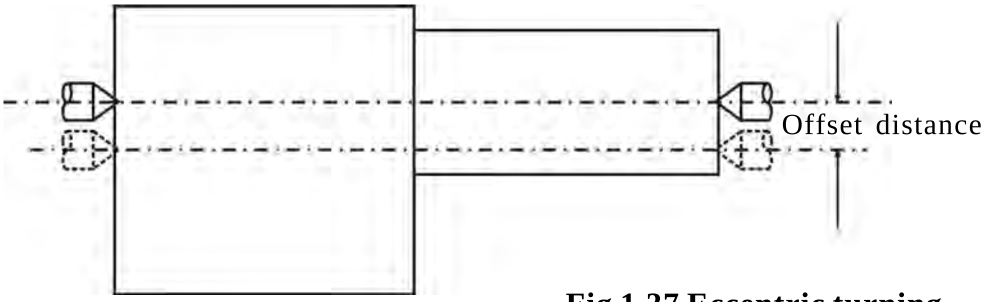

Fig 1.37 Eccentric turning

1.9.9 Taper turning

Taper

A taper may be defined as a uniform increase or decrease in diameter of a piece of work measured along its length.

Taper turning methods

1. Form tool method
2. Compound rest method
3. Tailstock setover method
4. Taper turning attachment method
5. Combined feed method

(i) Form tool method

A broad nose tool is ground to the required length and angle. It is set on the work by providing feed to the cross-slide. When the tool is fed into the work at right angles to the lathe axis, a tapered surface is generated.

This method is limited to turn short lengths of taper only. The length of the taper is shorter than the length of the cutting edge. Less feed is given as the entire cutting edge will be in contact with the work.

Taper turning by form tool method is illustrated in Fig. 1. 38

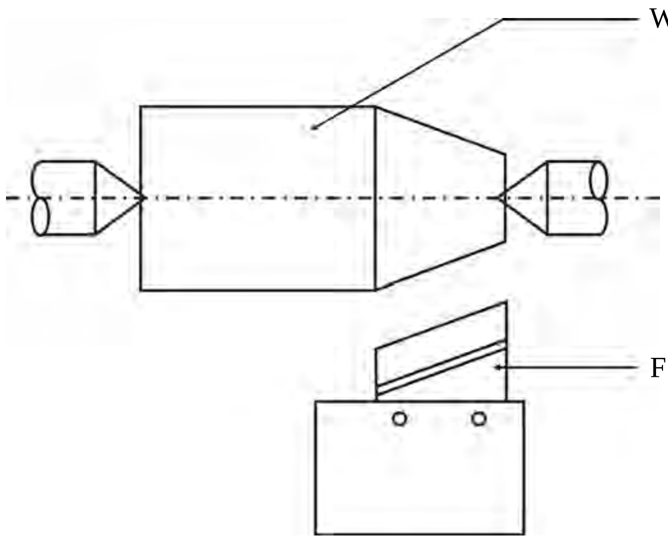

Fig 1.38 Taper turning by form tool method

(ii) Compound rest method

The compound rest of the lathe is attached to a circular base graduated in degrees, which may be swiveled and clamped at any desired angle. The angle of taper is calculated using the formula

$$\tan Ø = \frac{D - d}{2\,l}$$

Where D – Larger diameter
d – Smaller diameter
l – Length of the taper
Ø - Half taper angle

The compound rest is swiveled to the angle calculated as above and clamped. Feed is given to the compund slide to generate the required taper. *Taper turning by compound rest method is illustrated in Fig. 1.39*

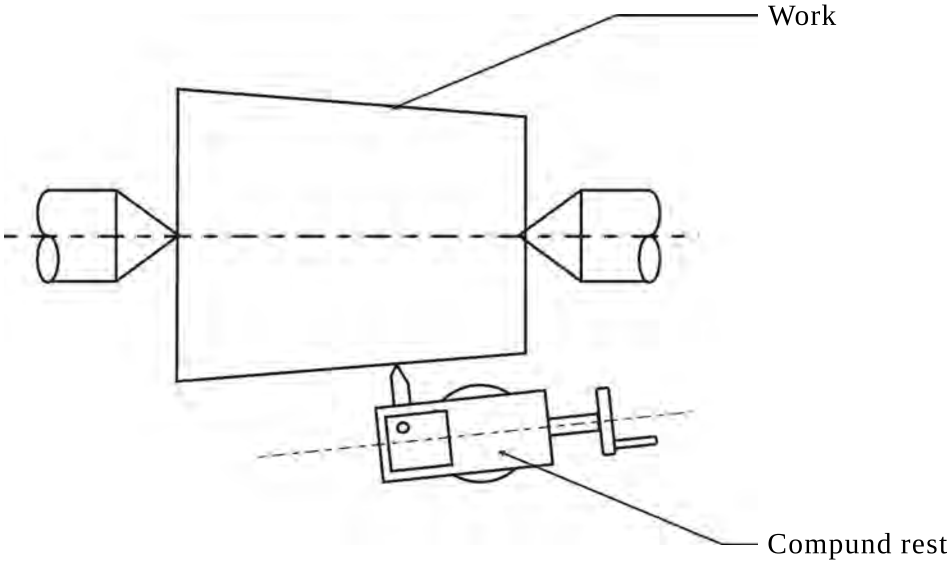

Fig 1.39 Taper turning by compound rest method

(iii) Tailstock setover method

Turning taper by the setover method is done by shifting the axis of rotation of the workpiece at an angle to the lathe axis and feeding the tool parallel to the lathe axis. The construction of tailstock is designed to have two parts namely the base and the body. The base is fitted on the bed guideways and the body having the dead centre can be moved at cross to shift the lathe axis.

The amount of setover - s, can be calculated as follows

$$s = L \times \frac{D - d}{2 l}$$

where s - Amount of setover D – Larger diameter

d – Smaller diameter L - Length of the work

l – Length of the taper

The dead centre is suitably shifted from its original position to the calculated distance. The work is held between centres and longitudinal feed is given by the carriage to generate the taper.

The advantage of this method is that the taper can be turned to the entire length of the work. Taper threads can also be cut by this method.

The amount of setover being limited, this method is suitable for turning small tapers (approx. upto 8°). Internal tapers cannot be done by this method.

Taper turning by tailstock setover method is illustrated in Fig. 1.40

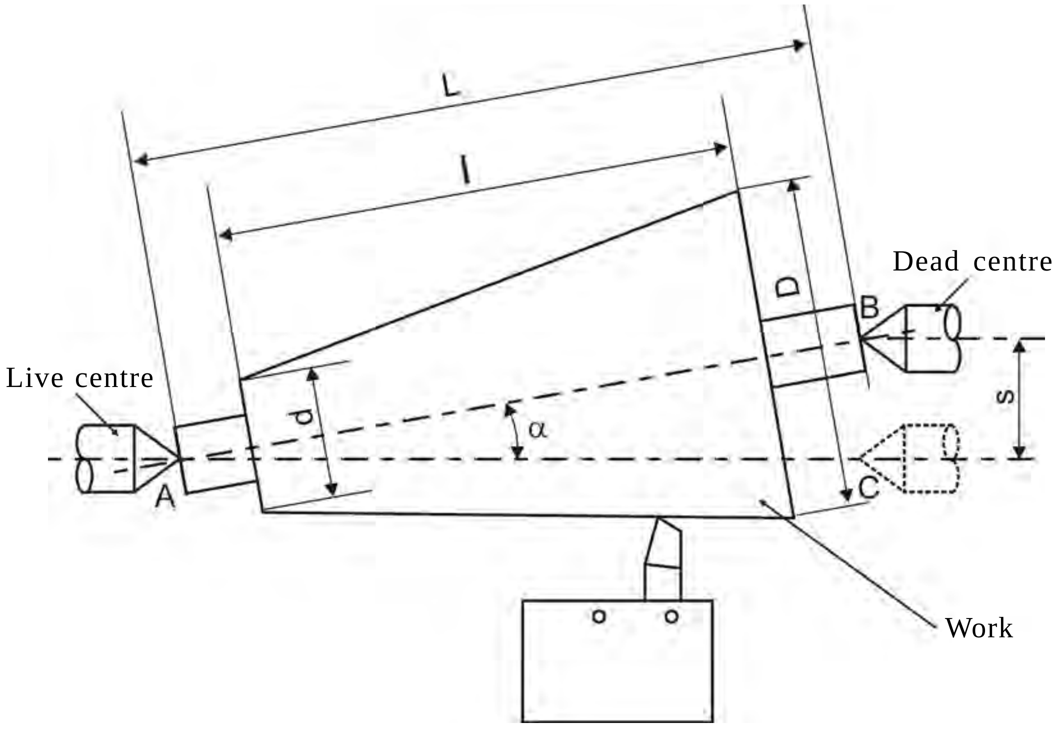

Fig 1.40 Taper turning by tailstock setover method

(iv) Taper attachment method

The taper attachment consists of a bracket which is attached to the rear end of the lathe bed. It supports a guide bar pivoted at the centre. The bar having graduation in degrees may be swiveled on either side of the zero graduation and set at the desired angle to the lathe axis. A guide block is mounted on the guide bar and slides on it. The cross slide is made free from its screw by removing the binder screw. The rear end of the cross slide is tightened with the guide block by means of a bolt. When the longitudinal feed is engaged, the tool mounted on the cross slide will follow the angular path as the guide block will slide on the guide bar set at an angle of the lathe axis. The depth of cut is provided by the compound slide which is set parallel to the cross-slide.

The advantage of this method is that long tapers can be machined. As power feed can be employed, the work is completed at a shorter time. The disadvantage of this method is that internal tapers cannot be machined. *Taper turning by taper attachment method is illustrated in Fig. 1. 41*

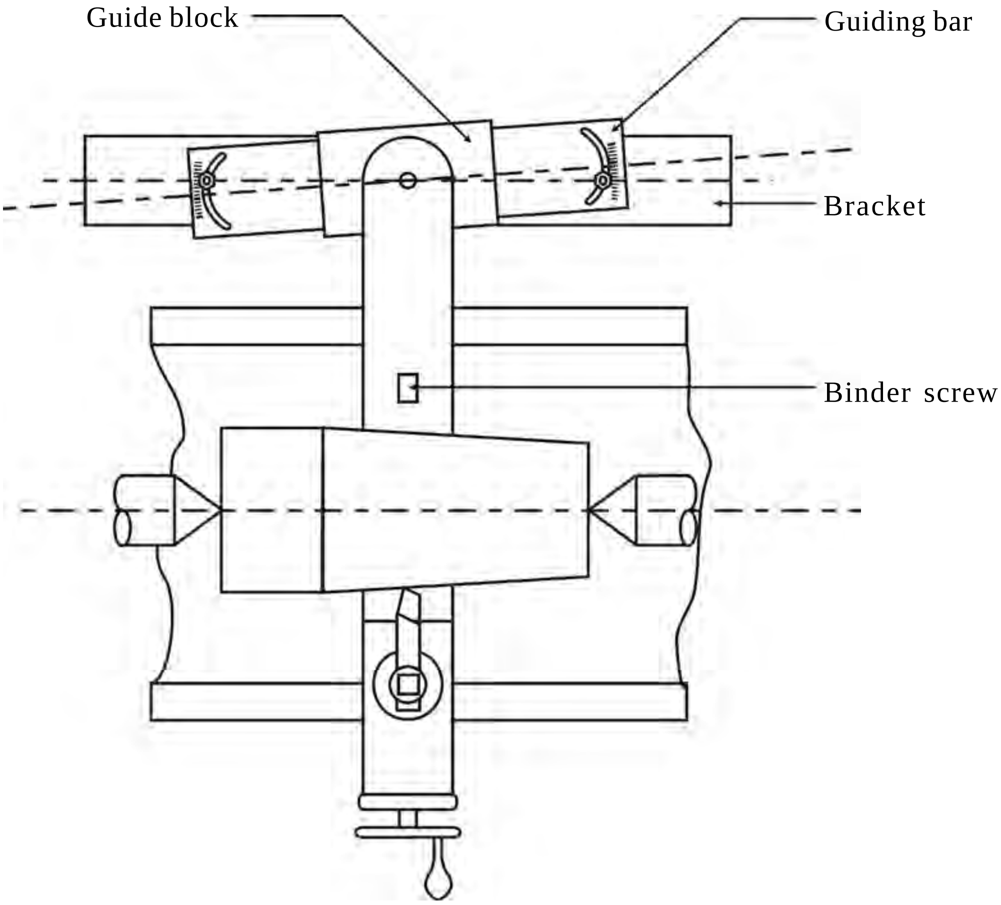

Fig 1.41 Taper turning by taper attachment method

(v) Combined feed method

Feed is given to the tool by the carriage and the cross-slide at the same time to move the tool at resultant direction to turn tapers.

1.9.10 Thread cutting

Thread cutting is one of the most important operations performed in a lathe. The process of thread cutting is to produce a helical groove on a cylindrical surface by feeding the tool longitudinally.

1. The job is revolved between centres or by a chuck. The longitudinal feed should be equal to the pitch of the thread to be cut per revolution of the work piece.

2. The carriage should be moved longitudinally obtaining feed through the leadscrew of the lathe.

3. A definite ratio between the longitudinal feed and rotation of the headstock spindle should be found out. Suitable gears with required number of teeth should be mounted on the spindle and the leadscrew.

4. A proper thread cutting tool is selected according to the shape of the thread. It is mounted on the toolpost with its cutting edge at the lathe axis and perpendicular to the axis of the work.

5. The position of the tumbler gears are adjusted according to the type of the thread (right hand or left hand).

6. Suitable spindle speed is selected and it is obtained through back gears.

7. Half nut lever is engaged at the right point as indicated by the thread chasing dial.

8. Depth of cut is set suitably to allow the tool to make a light cut on the work.

9. When the cut is made for the required length, the half nut lever is disengaged. The carriage is brought back to its original position and the above procedure is repeated until the required depth of the thread is achieved.

10. After the process of thread cutting is over, the thread is checked by suitable gauges.

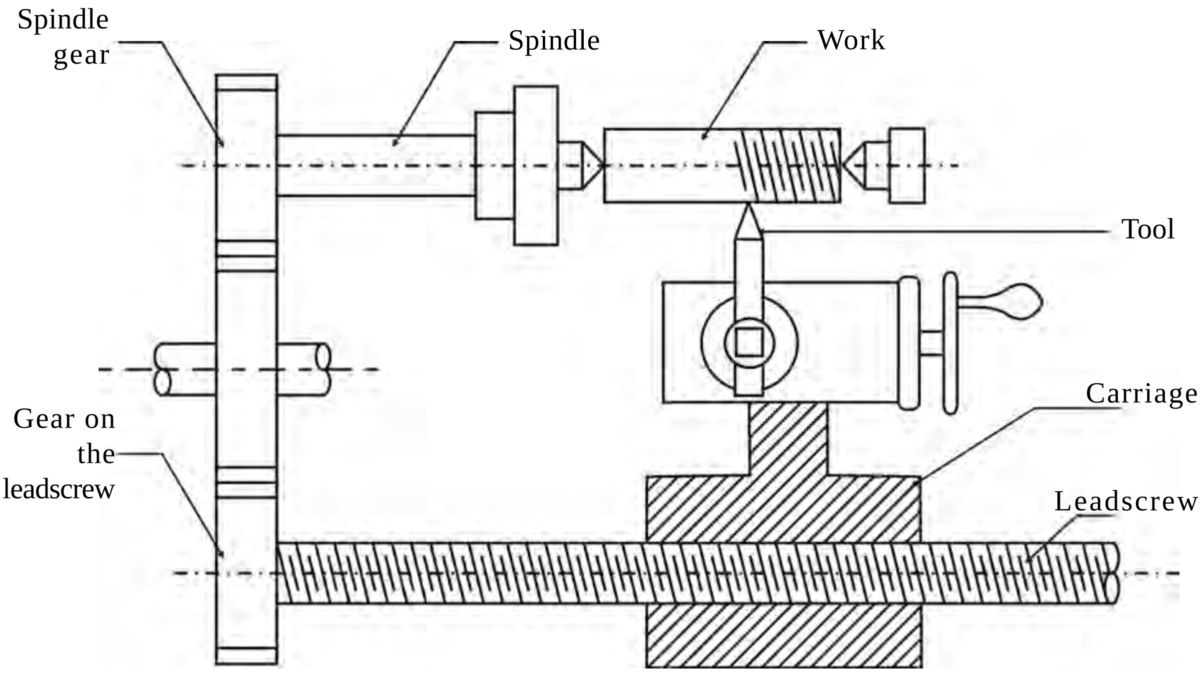

Fig 1.42 Thread cutting

QUESTIONS

I.A. Choose the correct option

1. The tool used in a lathe is a
   a. multipoint cutting tool b. single point cutting tool
   c. saw tooth cutting tool d. drill

2. Lathe was first developed by
   a. Henry Maudslay b. Eli Whitney c. James Nasmith d. Michael Faraday

3. Polishing lathe is a type of
   a. engine lathe b. tool room lathe
   c. high speed lathe d. automatic lathe

4. The spindle speed of high speed lathe is around
   a. 600-1000 r.p.m b. 1200-3200 r.p.m
   c. 2000-2400 r.p.m d. 3500-4000r.p.m

5. Turret and capstan lathes are classified under
   a. automatic lathes b. semi-automatic lathes
   c. bench lathe d. tool room lathe

6. The assembly which consists of saddle, cross-slide, compound slide and tool post is
   a. headstock b. tailstock c. bed d. carriage

7. Knurling tool (knurl) is a
   a. single point cutting tool b. saw tooth cutting tool
   c. embossing tool d. parting tool

8. A part useful in turning tapers is
   a. cross-slide b. compound rest c. saddle d. apron

9. Formula for finding cutting speed in a lathe is
   a. $\frac{\pi dn}{1000}$ b. $\frac{D - d}{2l}$ c. $\pi r^2 h$ d. $\frac{D - d}{2} \times \frac{L}{l}$

10. An important operation performed in a lathe is
   a. machining flat surface b. thread cutting c. gear cutting d. grinding

I. B. Answer the following questions in one or two words

1. Name the type of lathe used for making vessels from sheet metal.
2. Name a device useful in holding a long workpiece.
3. Mention the types of lathe bedways.
4. What is the name of the device useful in holding a work with a central hole?

5. Name the operation performed by offsetting the tailstock.

II Answer the following questions in one or two sentences

1. What is turning?
2. What are the important parts of a lathe?
3. Mention any four operations performed in a lathe.
4. What are the uses of a tool room lathe?
5. Mention the special feature of turret and capstan lathe?
6. What is swing diameter in a lathe?
7. What are the advantages of a V-bed?
8. Mention two types of tool post?
9. What is the use of tumbler gears?
10. What are the uses of leadscrew in a lathe?
11. What are the uses of back gears in a lathe?
12. Mention any four work holding devices used in a lathe.
13. Mention the use of a face plate.

III. Answer the following questions in about a page

1. List out the types of lathe.
2. Mention the differences between a engine lathe and a turret lathe?
3. What are the differences between a turret lathe and a capstan lathe?
4. How is the size of a lathe specified?
5. What are the parts found in the carriage of a lathe ? Explain any two.

IV. Answer the following questions in detail

1. Draw a neat sketch of a lathe and label its parts.
2. Explain the construction of tailstock of a lathe with a diagram.
3. Draw and explain the apron mechanism.
4. Explain with a diagram how different spindle speeds are obtained with a step cone pulley drive.
5. Explain the back gear arrangement with a diagram.
6. Draw an all geared headstock and explain.
7. Explain any four work holding devices in a lathe with suitable diagrams.

2. DRILLING MACHINE

2.1 Introduction

Drilling machine is one of the most important machine tools in a workshop. It was designed to produce a cylindrical hole of required diameter and depth on metal workpieces.

Though holes can be made by different machine tools in a shop, drilling machine is designed specifically to perform the operation of drilling and similar operations. Drilling can be done easily at a low cost in a shorter period of time in a drilling machine.

Drilling can be called as the operation of producing a cylindrical hole of required diameter and depth by removing metal by the rotating edges of a drill.

The cutting tool known as drill is fitted into the spindle of the drilling machine. A mark of indentation is made at the required location with a center punch. The rotating drill is pressed at the location and is fed into the work. The hole can be made upto a required depth.

2.2 Construction of a drilling machine

The basic parts of a drilling machine are a base, column, drillhead and spindle.

The base made of cast iron may rest on a bench, pedestal or floor depending upon the design. Larger and heavy duty machines are grounded on the floor. The column is mounted vertically upon the base. It is accurately machined and the table can be moved up and down on it. The drill spindle, an electric motor and the mechanism meant for driving the spindle at different speeds are mounted on the top of the column. Power is transmitted from the electric motor to the spindle through a flat belt or a 'V' belt.

2.3 Types of drilling machines

Drilling machines are manufactured in different types and sizes according to the type of operation, amount of feed, depth of cut, spindle speeds, method of spindle movement and the required accuracy.

The different types of drilling machines are:

1. Portable drilling machine (or) Hand drilling machine
2. Sensitive drilling machine (or) Bench drilling machine
3. Upright drilling machine
4. Radial drilling machine
5. Gang drilling machine
6. Multiple spindle drilling machine
7. Deep hole drilling machine

2.3.1 Portable drilling machine

Portable drilling machine can be carried and used anywhere in the workshop. It is used for drilling holes on workpieces in any position, which is not possible in a standard drilling machine. The entire drilling mechanism is compact and small in size and so can be carried anywhere. This type of machine is widely adapted for automobile built-up work. The motor is generally universal type. These machines can accommodate drills from 12mm to 18 mm diameter. Portable drilling machines are operated at higher speeds.

2.3.2 Sensitive drilling machine

It is designed for drilling small holes at high speeds in light jobs. High speed and hand feed are necessary for drilling small holes. The base of the machine is mounted either on a bench or on the floor by means of bolts and nuts. It can handle drills upto 15.5mm of diameter. The drill is fed into the work purely by hand . The operator can sense the progress of the drill into the work because of hand feed. The machine is named so because of this reason. A sensitive drilling machine consists of a base, column, table, spindle, drillhead and the driving mechanism.

A sensitive drilling machine is shown in Fig. 2.1.

Base

The base is made of cast iron and so can withstand vibrations. It may be mounted on a bench or on the floor. It supports all the other parts of the machine on it.

Column

The column stands vertically on the base at one end. It supports the work table and the drill head. The drill head has drill spindle and the driving motor on either side of the column.

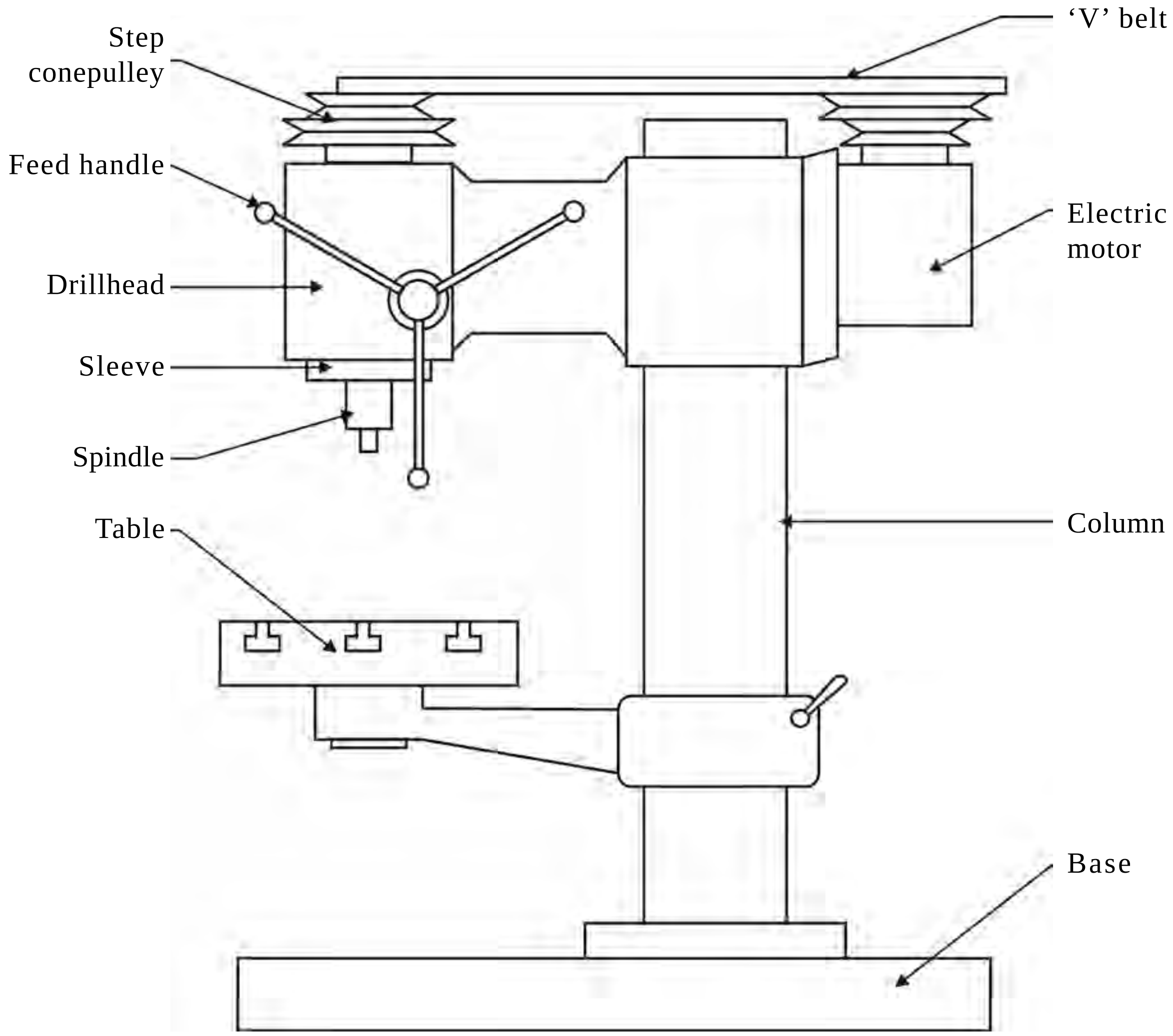

Fig 2.1 Sensitive drilling machine

Table

The table is mounted on the vertical column and can be adjusted up and down on it. The table has 'T'-slots on it for holding the workpieces or to hold any other work holding device. The table can be adjusted vertically to accommodate workpieces of different heights and can be clamped at the required position.

Drill head

Drillhead is mounted on the top side of the column. The drill spindle and the driving motor are connected by means of a V-belt and cone pulleys. The motion is transmitted to the spindle from the motor by the belt. The pinion attached to the handle meshes with the rack on the sleeve of the spindle for providing the drill the required downfeed. There is no power feed arrangement in this machine. The spindle rotates at a speed ranging from 50 to 2000 r.p.m.

2.3.3 Upright drilling machine

The upright drilling machine is designed for handling medium sized workpieces. Though it looks like a sensitive drilling machine, it is larger and heavier than a sensitive drilling machine. Holes of diameter upto 50mm can be made with this type of machine. Besides, it is supplied with power feed arrangement. For drilling different types of work, the machine is provided with a number of spindle speeds and feed.

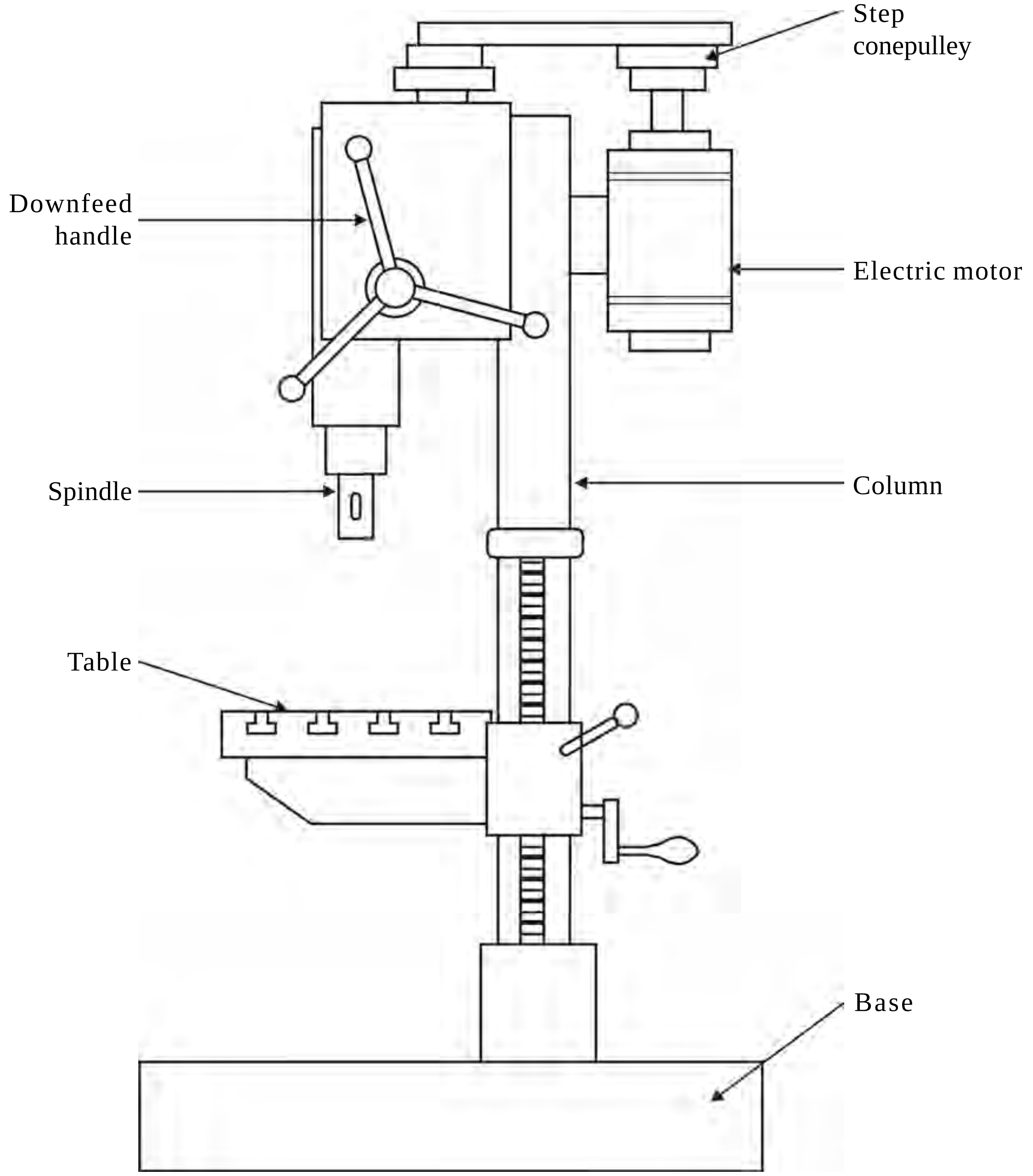

Fig 2.2 Upright drilling machine

There are two different types of upright drilling machines according to the cross-section of the column and they are

1. Round column section upright drilling machine
2. Box column section upright drilling machine

A round column section upright drilling machine is shown in Fig. 2.2.

The main parts of a upright drilling machine are : base, column, table and drillhead.

Base

Base is made of cast iron as it can withstand vibrations set by the cutting action. It is erected on the floor of the shop by means of bolts and nuts. It is the supporting member as it supports column and other parts on it. The top of the base is accurately machined and has 'T'-slots. When large workpieces are to be held, they are directly mounted on the base.

Column

Column stands vertically on the base and supports the work table and all driving mechanisms. It is designed to withstand the vibrations set up due to the cutting action at high speeds.

Table

Table is mounted on the column and can be adjusted up and down on it. It is provided with 'T'-slots for workpieces to be mounted directly on it. Table may have the following adjustments

(i) Vertical adjustment obtained by the rack on the column and a pinion in the table

(ii) Circular adjustment about its own axis

After the required ajustments are made, the table is clamped in position.

Drill head

The drillhead is mounted on the top of the column. It houses the driving and feeding mechanism of the spindle. The spindle can be provided with hand or power feed . There are separate hand wheels for quick hand feed and sensitive hand feed. The handle is spring loaded so that the drill spindle is released from the work when the operation is over.

2.3.4 Radial drilling machine

The radial drilling machine is intended for drilling on medium to large and heavy workpieces. It has a heavy round column mounted on a large base. The column supports a radial arm, which can be raised or lowered to enable the table to accommodate workpieces of different heights. The arm, which has the drilllhead on it, can be swung around to any position. The drill head can be made to slide on the radial arm. The machine is named so because of this reason. It consists of parts like base, column, radial arm, drillhead and driving mechanism. *A radial drilling machine is illustrated in Fig. 2.3*

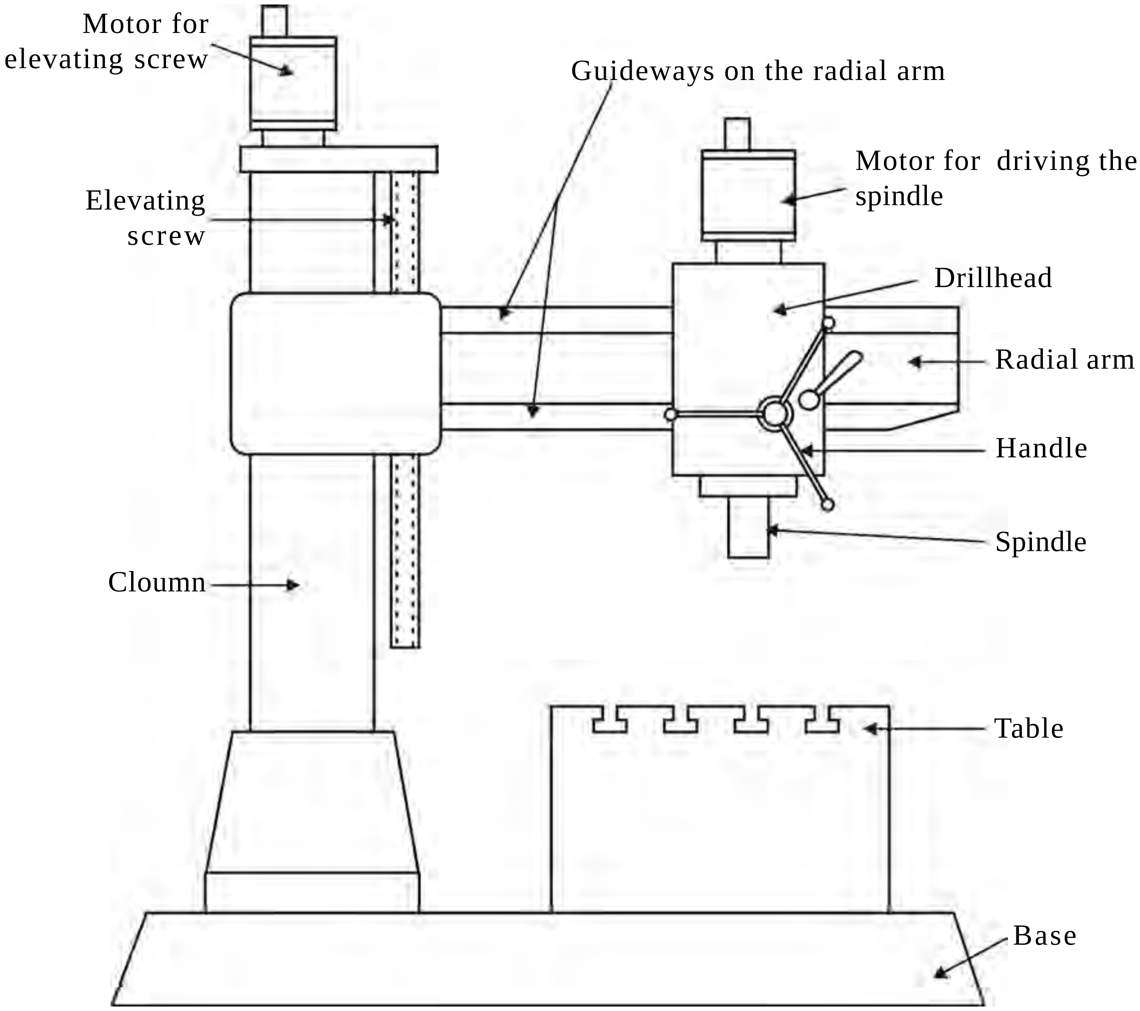

Fig 2.3 Radial drilling machine

Base

The base is a large rectangular casting and is mounted on the floor of the shop. Its top is accurately finished to support a column at one end and the table at the other end. 'T'-slots are provided on it for clamping workpieces.

Column

The column is a cylindrical casting, which is mounted vertically at one end of the base. It supports the radial arm and allows it to slide up and down on its face. The vertical adjustment of the radial arm is effected by rotating a screw passing through a nut attached to the arm. An electric motor is mounted on the top of the column for rotating the elevating screw.

Radial arm

The radial arm is mounted on the column parallel to the base and can be adjusted vertically. The vertical front surface is accurately machined to provide guideways for the drillhead. The drillhead can be adjusted along these guideways according to the location of the work. In some machines, a separate motor is provided for this movement. The arm may be swung around the column. It can also be moved up and down to suit workpieces of different heights.

Drillhead

The drillhead is mounted on the radial arm and houses all mechanism for driving the drill at different speeds and at different feed. A motor is mounted on top of the drillhead for this purpose. To adjust the position of drill spindle with respect to the work, the drillhead may be made to slide on the guideways of the arm. The drillhead can be clamped in position after the spindle is properly adjusted.

Universal radial drilling machine

It is a machine in which the spindle can be swiveled to any required angle in vertical and horizontal positions.

2.3.5. Gang drilling machine

Gang drilling machine has a long common table and a base. Four to six drillheads are placed side by side. The drillheads have separate driving motors. This machine is used for production work.

A series of operations like drilling, reaming, counterboring and tapping may be performed on the work by simply shifting the work from one position to the other on the work table. Each spindle is set with different tools for different operations.

Fig.2.4 shows a gang drilling machine.

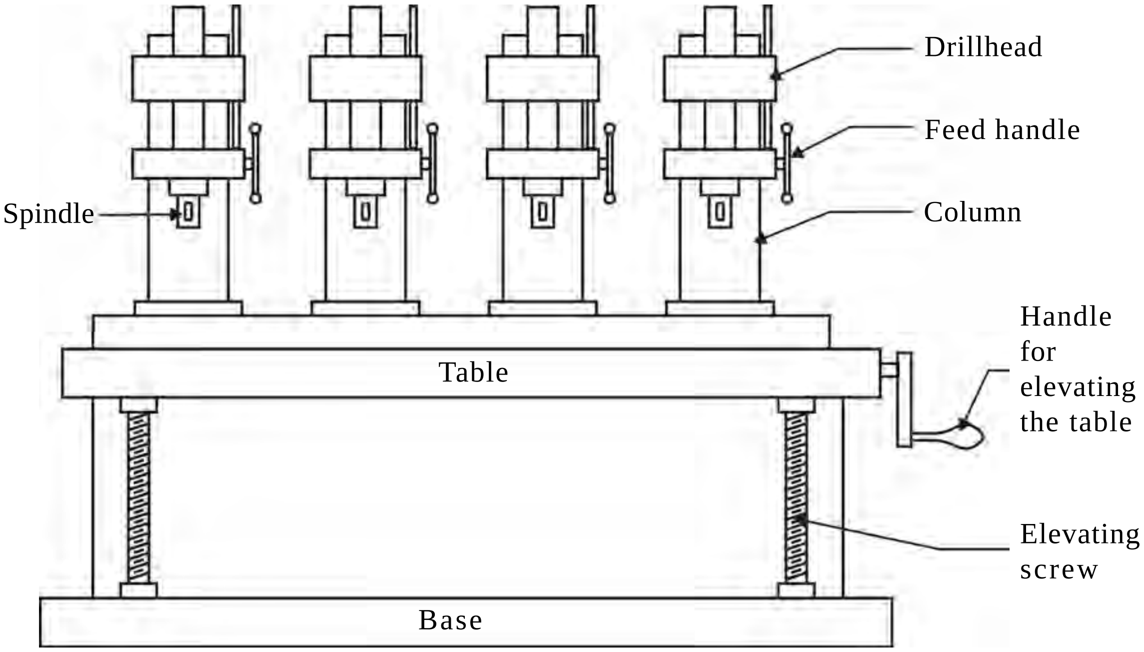

Fig 2.4 Gang drilling machine

2.3.6 Multiple spindle drilling machine

This machine is used for drilling a number of holes in a workpiece simultaneously and for reproducing the same pattern of holes in a number of identical pieces. A multiple spindle drilling machine also has several spindles. A single motor using a set of gears drives all the spindles. All the spindles holding the drills are fed into the work at the same time. The distances between the spindles can be altered according to the locations where holes are to be drilled. Drill jigs are used to guide the drills.

2.3.7 Deep hole drilling machine

A special machine and drills are required to drill deeper holes in barrels of gun, spindles and connecting rods. The machine designed for this purpose is known as deep hole drilling machine. High cutting speeds and less feed are necessary to drill deep holes. A non-rotating drill is fed slowly into the rotating work at high speeds. Coolant should be used while drilling in this machine. There are two different types of deep hole drilling machines

1. Vertical type 2. Horizontal type

2.4 Size of a drilling machine

Drilling machines are specified according to their type.

A portable drilling machine is specified by the maximum diameter of the drill that it can handle.

The size of the sensitive and upright drilling machines are specified by the size of the largest workpiece that can be centered under the spindle. It is slightly smaller than twice the distance between the face of the column and the axis of the spindle.

Particulars such as maximum size of the drill that the machine can operate, diameter of the table, maximum travel of the spindle, numbers and range of spindle speeds and feeds available, morse taper number of the drill spindle, floor space required, weight of the machine, power input are also needed to specify the machine completely. The size of the radial drilling machine is specified by the diameter of the column and length of the radical arm.

2.5 Drill spindle assembly

A drill spindle assembly is illustrated in Fig. 2.5. The drill spindle is a vertical shaft, which holds the drill. A long keyway is cut on the spindle and a sliding key connects it with a bevel gear or a stepped cone pulley. It receives motion from the driving motor. The spindle rotates within a non-rotating sleeve known as quill. The spindle and the sleeve are connected by a thrust bearing.

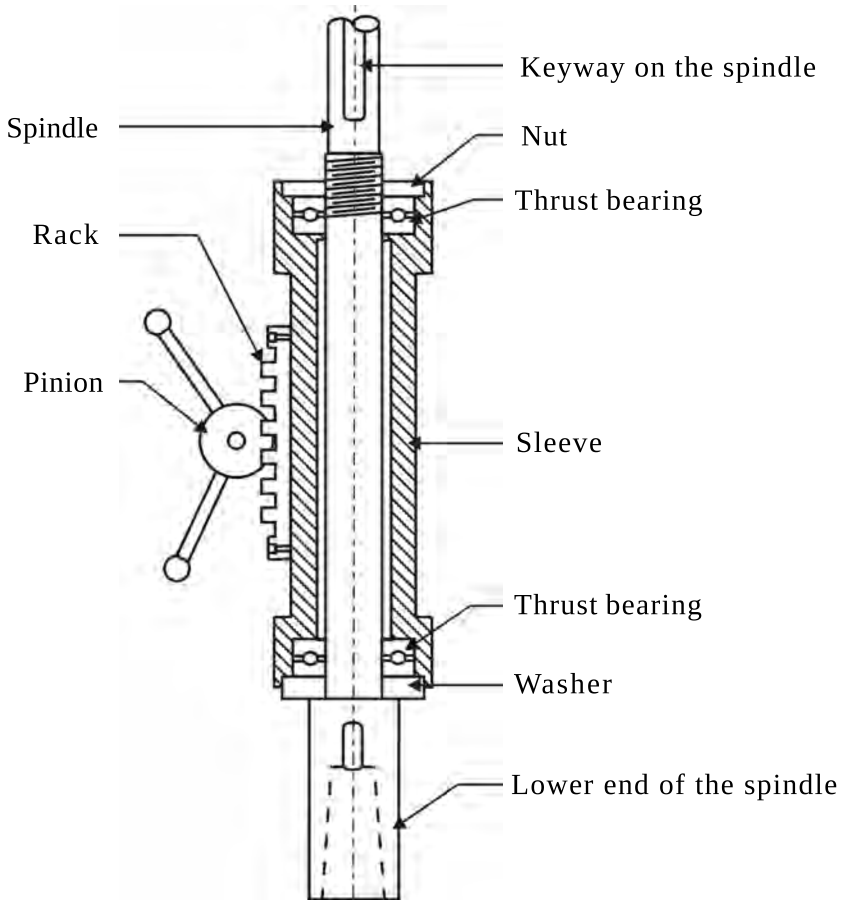

Fig 2.5 Drill spindle

Rack teeth are cut on the outer surface of the quill. The sleeve (quill) may be moved up and down by rotating a pinion which meshes with the rack. This movement is given to the spindle for providing the required feed. As there is a long keyway on top of the spindle, it is connected to the driving mechanism even during the feed movement.

A morse taper hole is provided at the lower end of the spindle. It is useful in accommodating a taper shank drill. The tang of the drill fits into a slot provided at the end of the taper hole. To remove the drill from the spindle a drift may be pushed through the slot.

The spindle drive is obtained in three methods. They are:

1. Step cone pulley drive
2. Step cone pulley with back gear arrangement
3. Gear box drive

2.6 Work holding devices

The work should be held firmly on the machine table before performing any operation on it. As the drill exerts very high quantity of torque while rotating, the work should not be held by hand. If the workpiece is not held by a proper holding device, it will start rotating along with the tool causing injuries to the operator and damage to the machine.

The devices used for holding the work in a drilling machine are

1. Drill vise
2. 'T' - bolts and clamps
3. Step block
4. V - block
5. Angle plate
6. Drill jigs

2.6.1 Drill vise

Vise is one of the important devices used for holding workpices on a drilling machine table. The work is clamped in a vise between a fixed jaw and a movable jaw.

Parallel blocks are placed below the work so that the drill may completely pass through the work without damaging the table. Different types of vises are used for holding different types of work and for performing different operations.

The different types of vises are

1. Plain vise
2. Swivel vise
3. Tilting vise
4. Universal vise

A plain vise is shown in Fig. 2.6.

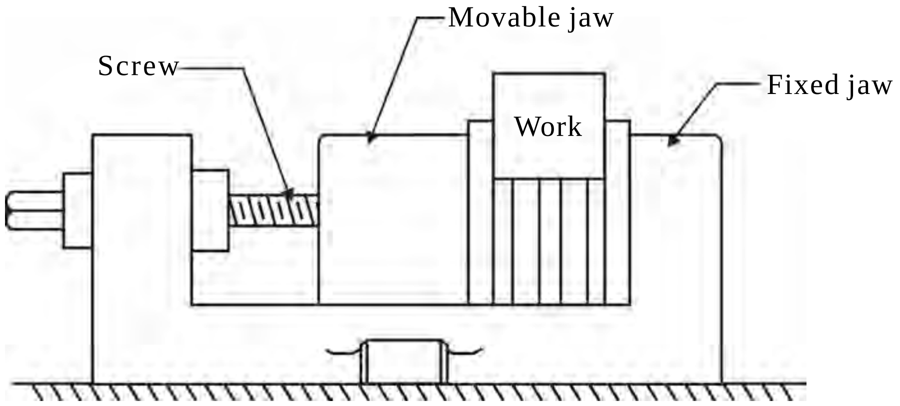

Fig 2.6 Drill vice

2.6.2 'T' - bolts and clamps

The workpieces can be held directly on the machine table by means of 'T' - bolts and clamps. The top of the machine table has 'T' - slots into which 'T' - bolts may be fitted. The bolts of diameter 15 to 20mm are used. The clamps are made of mild steel. 'T' - bolts pass through a central hole on the clamp. The clamp is made to rest horizontally on the work surface by placing a suitable step block at the other end of the work.

Some of the common types of clamps are: Plain slot clamp, goose-neck clamp and finger clamp. *Fig. 2.7 illustrates 'T' - bolt and a clamp.*

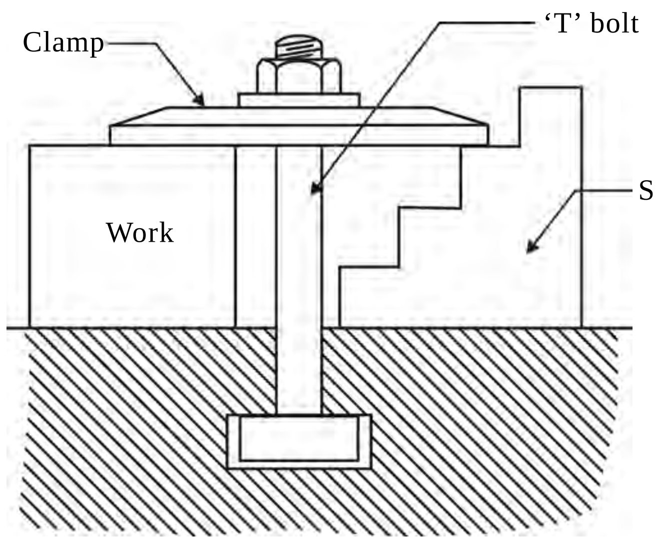

Fig 2.7
'T' bolt & clamp

2.6.3 Step blocks

The step blocks are used in combination with 'T' - bolts and clamps for holding the work directly on the table. The step block supports the other end of the clamp. Workpieces of different heights are held by leveling the clamp on different steps of the step block. *Fig. 2.8 illustrates a step block.*

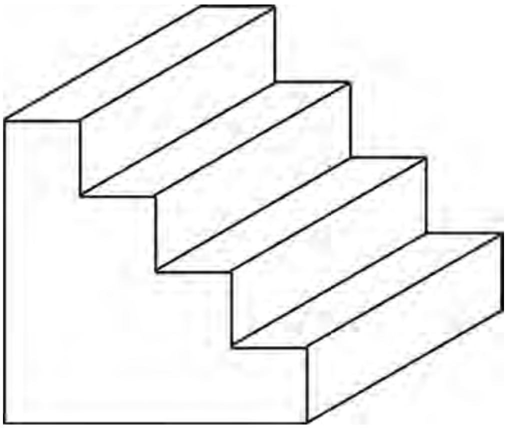

Fig 2.8 Step block

2.6.4 'V' - block

'V' - blocks are used for holding cylindrical workpieces. The work may be supported on two or three 'V' - blocks according to the length of the work. The work is held on the 'V' groove and is clamped by straps and bolts. They are made of cast iron or steel and are accurately machined. *Fig. 2.9 shows the use of a 'V' - block.*

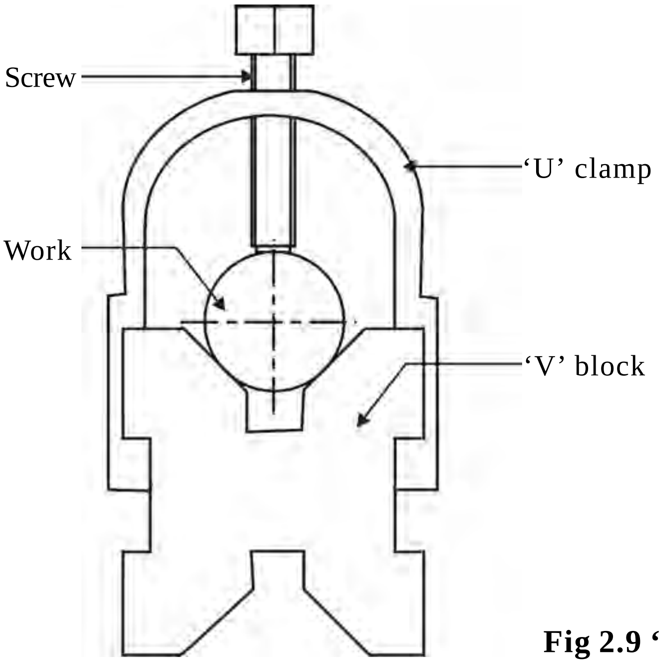

Fig 2.9 'V' block

2.6.5 Angle plate

Angle plates have two faces at right angle to each other and are made of cast iron. It resembles the English alphabet 'L'. All the sides of a angle plate are machined accurately. Slots and holes are provided on both the faces of the angle plate. Work is clamped on one of its faces by means of bolts and nuts. *The use of an angle plate is shown in Fig. 2.10*

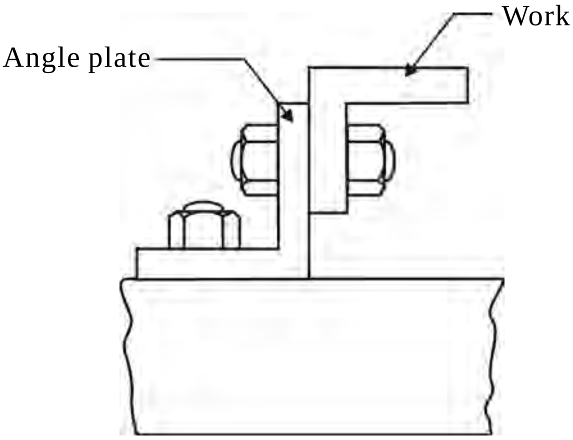

Fig 2.10 Angle plate

2.6.6 Drill Jig

Drill jigs are used in mass production process. A jig is specially designed to hold the work securely and to guide the tool at any desired position. Holes may be drilled at the same relative positions on each of the identical workpieces.

The work is clamped and removed easily. The cost of making a drill jig is more but a low order of skill is sufficient to work with a drill jig. *Fig 2.11 illustrates a drill jig.*

Different types of drill jigs are

1. Plate jig
2. Channel jig
3. Diameter jig
4. Box jig
5. Indexing jig.

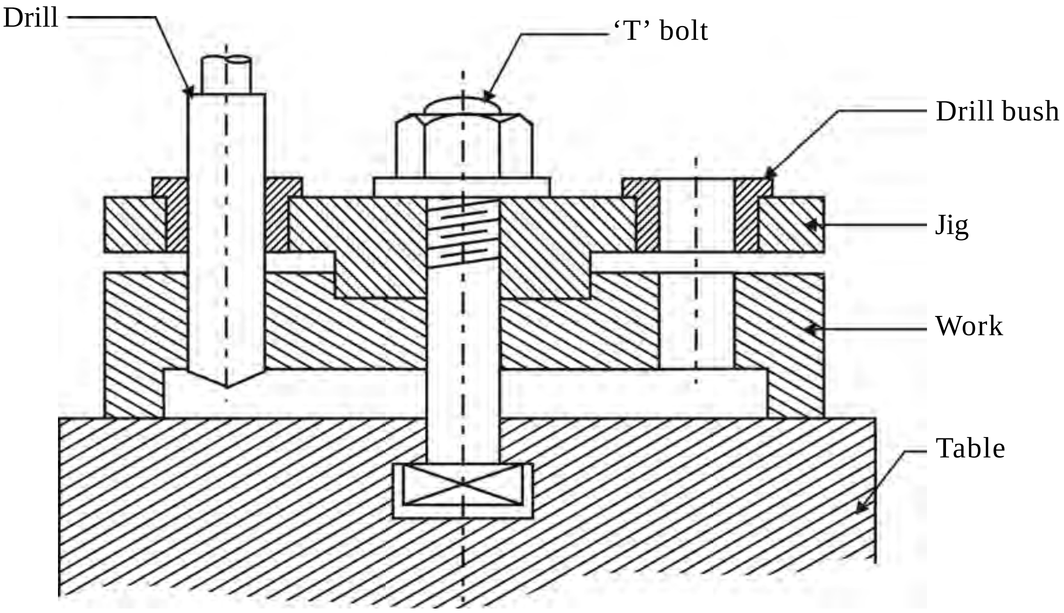

Fig 2.11 Drill jig

2.7 Tools used in a drilling machine

Different tools are used for performing different types of operations. The most commonly used tools in a drilling machine are

1. Drill
2. Reamer
3. Counterbore
4. Countersink
5. Tap

2.7.1 Drill

A drill is a tool used to originate a hole in a solid material. A helical groove known as 'flute' is cut along the length of the drill.

Different types of drills are

1. Flat Drill
2. Straight fluted drill
3. Twist drill
4. Centre drill

Twist drills are the type generally used in shop work. They are made of High speed steel (HSS) or High carbon steel.

There are two types of twist drills namely (i) Straight shank twist drill and (ii) Taper shank twist drill. The diameter of the straight shank drill ranges from 2 to 16mm. Taper shanks are provided on drills of larger diameter.

2.7.2 Reamer

The tool used for enlarging and finishing a previously drilled hole is known as a reamer. It is a multi tooth cutter and removes smaller amount of material. It gives a better fnish and accurate dimension.

2.7.3 Counterbore

A Counterbore is a multi tooth cutting tool used for enlarging the top of the previously machined hole. It has three or four cutting teeth.

The flutes on them may be straight or helical. Straight fluted tools are used for machining softer materials like brass and aluminium and for short depth of cut. Helical fluted counterbores are used for longer holes.

2.7.4 Countersink

A countersink has cutting edges on its conical surfaces. It has a similar construction of a counterbore except for the angle of the cutting edges.The angle of countersinks will generally be 60°, 82° or 90°. It is used for enlarging the top of the holes conically.

2.7.5 Tap

A tap has threads like a bolt.It has three to four flutes cut across the threads. It can cut threads on the inside of a hole. The flutes on the threads form the cutting edges. It is a multi point cutting tool. It will dig into the walls of the hole as the lower part of the tap is slightly tapered. The shank of the tap is square shaped to enable it to be held by a tap wrench.

2.7.6 Twist drill nomenclature

Axis

It is the longitudinal centerline of the drill running through the centres of the tang and the chisel edge.

Body

It is the part of the drill from its extreme point to the commencement of the neck, if present. Otherwise, it is the part extending upto the commencement of the shank. Helical grooves are cut on the body of the drill.

Shank

It is the part of the drill by which it is held and driven. It is found just above the body of the drill. The shank may be straight or taper. The shank of the drill can be fitted directly into the spindle or by a tool holding device.

Tang

The flattened end of the taper shank is known as tang. It is meant to fit into a slot in the spindle or socket. It ensures a positive drive of the drill.

Neck

It is the part of the drill, which is diametrically undercut between the body and the shank of the drill. The size of the drill is marked on the neck.

Point

It is the sharpened end of the drill. It is shaped to produce lips, faces, flanks and chisel edge.

Lip

It is the edge formed by the intersection of flank and face. There are two lips and both of them should be of equal length. Both lips should be at the same angle of inclination with the axis (59°).

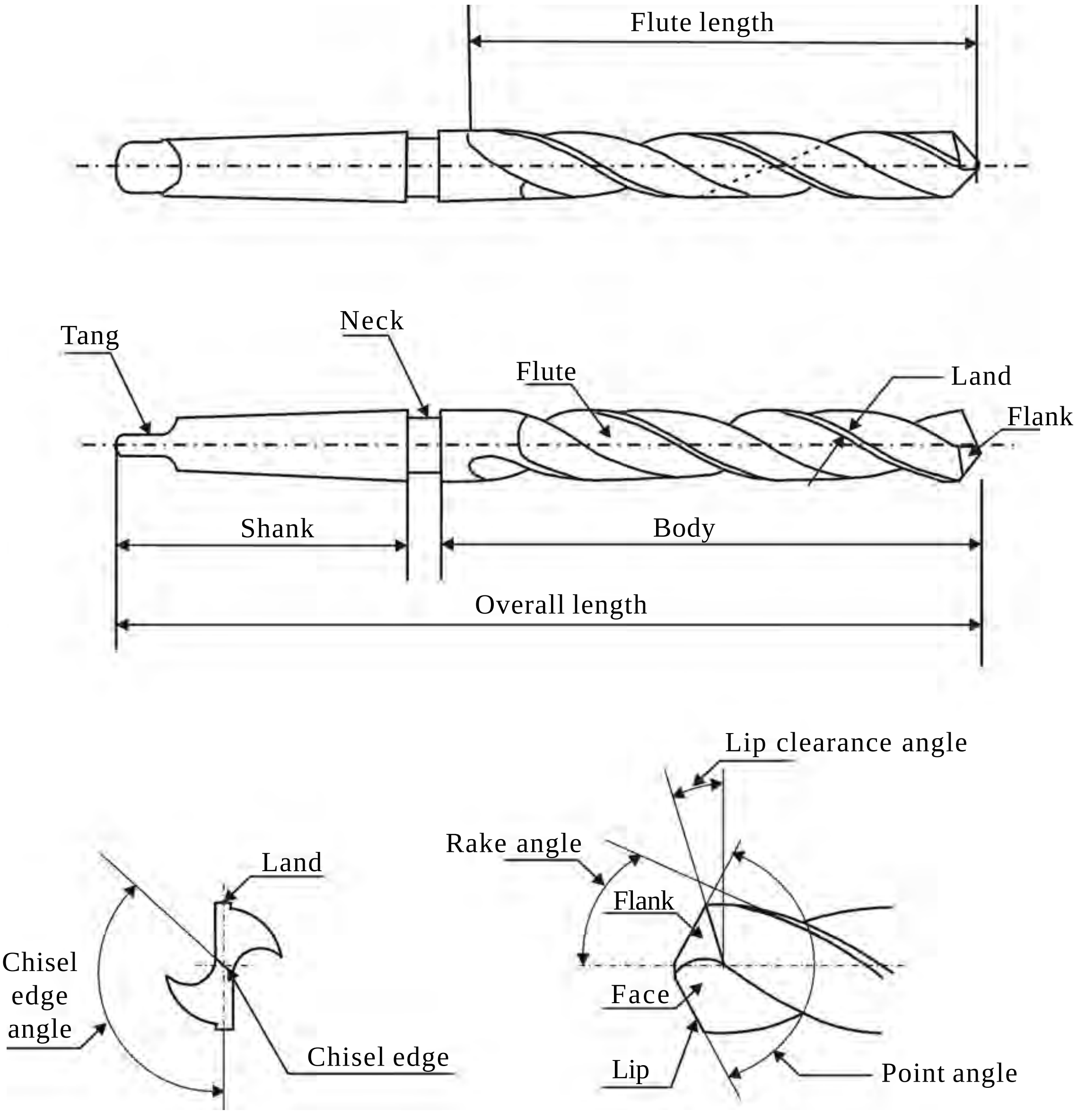

Fig 2.12 Twist drill nomenclature

Land

It is the cylindrically ground surface on the leading edges of the drill flutes adjacent to the body clearance surface. The alignment of the drill is maintained by the land. The hole is maintained straight and to the right size.

Flutes

The grooves in the body of the drill are known as flutes. Flutes form the cutting edges on the point. It allows the chips to escape and make them curl. It permits the cutting fluid to reach the cutting edges.

Angles

Chisel edge angle

The obtuse angle included between the chisel edge and the lip as viewed from the end of the drill. It usually ranges from 120° to 135°.

Helix angle or rake angle

The helix or rake angle is the angle formed by the leading edge of the land with a plane having the axis of the drill. If the flute is straight, parallel to the drill axis, then there would be no rake. If the flute is right handed, then it is positive rake and the rake is negative if it is left handed. The usual value of rake angle is 30° or 45°.

Point angle

This is the angle included between the two lips projected upon a plane parallel to the drill axis and parallel to the two cutting lips. The usual point angle is 118°. When hard alloys are drilled the value increases.

Lip clearance angle

The angle formed by the flank and a plane at right angles to the drill axis. The angle is normally measured at the periphery of the drill. The lip clearance angle ranges from 12° to 15°.

2.8 Tool holding devices

Different tools are used for performing different operations. They are fitted into the drill spindle by different methods. They are

1. By directly fitting in the spindle
2. By a sleeve
3. By a socket
4. By a chuck
5. Tapping attachment

2.8.1 Spindle

Almost all drilling machines have their spindle bored out to a standard taper(1:20) to receive the taper shank of the tool. While fitting the tool, the shank of the drill (or any other tool) is forced into the tapered hole and the tool is gripped by friction. The tool may be rotated with the spindle by friction between the tapered surface and the spindle. But to ensure a positive drive, the tang of the tool fits into a slot at the end of the taper hole. The tool may be removed by pressing a tapered wedge known as drift into the slotted hole of the spindle.

2.8.2 Sleeve

The drill spindle is suitable for holding only one size of tool shank. If the shank of the tool is smaller than the taper in the spindle hole, a taper sleeve is used. The outside taper of the sleeve conforms to the spindle taper and the inside taper holds the shanks of the smaller size tools. The sleeve has a flattened end or tang which fits into the slot of the spindle. The tang of the tool fits into a slot provided at the end of the taper hole of the sleeve. Different sizes of tool shanks may be held by using different sizes of sleeve. In order to remove the drill from the spindle, the drill along with the sleeve is removed with the help of a drift. The drill is then removed from the sleeve by the same method.

Fig. 2.13 illustrates a sleeve.

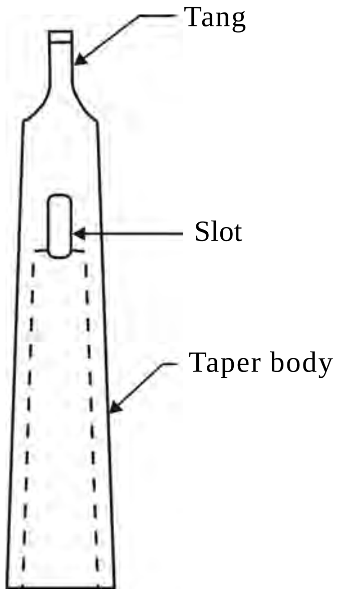

Fig 2.13 Drill sleeve

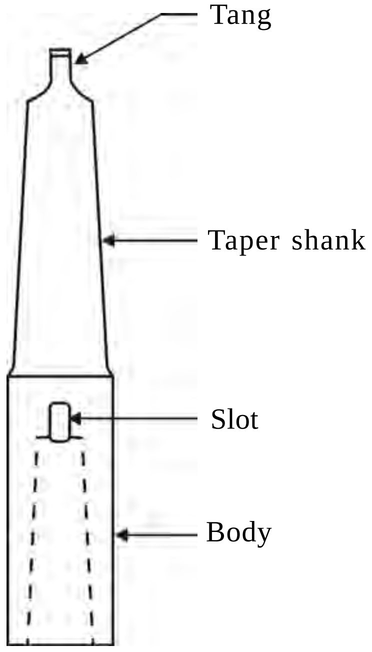

Fig 2.14 Drill socket

2.8.3 Socket

Drill sockets are much longer in size than the drill sleeves. A socket consists of a solid shank attached to the end of a cylindrical body. The taper shank of the socket conforms to the taper of the drill spindle and fits into it. The body of the socket has a tapered hole larger than the drill spindle taper into which the taper shank of any tool may be fitted. The tang of the socket fits into slot of the spindle and the tang of the tool fits slot of the socket. *Fig. 2.14 illustrates a socket.*

2.8.4 Drill chuck

This type of chuck is particularly adapted for holding tools having straight shanks. The drill chuck has a taper shank which fits into the taper hole of the spindle. The jaws fitted in the body of the chuck holds the straight shank drills. *Fig. 2.15 illustrates a drill chuck.*

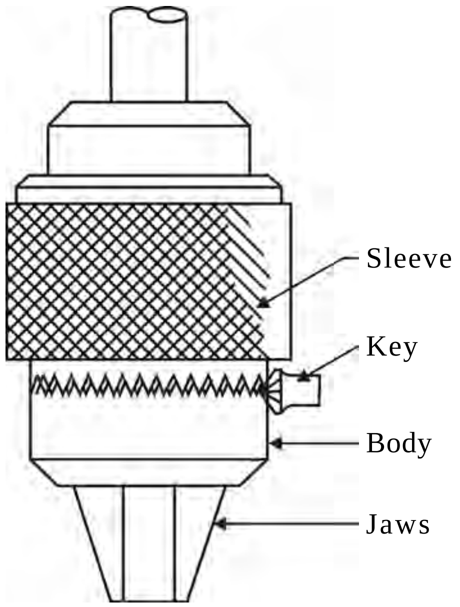

Fig 2.15 Drill chuck

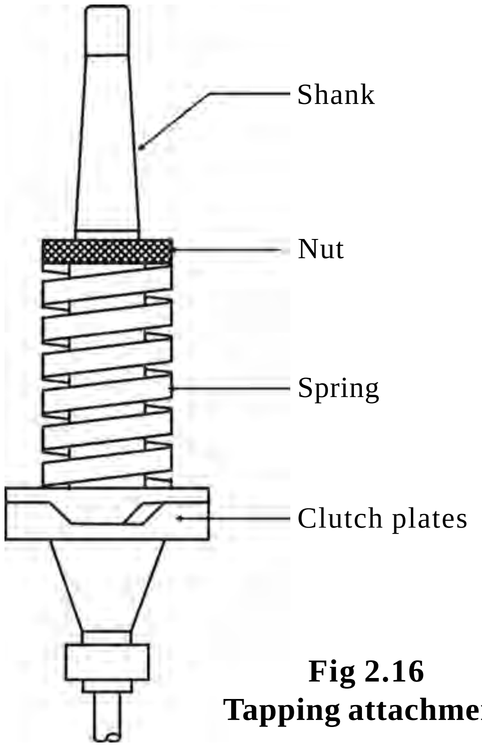

Fig 2.16
Tapping attachment

2.8.5. Tapping attachment

The tapping attachment is used to hold the tool known as 'tap'. It serves as a flexible connection between the spindle and the tap. The taper shank of the attachment is fitted into the drill spindle. The tap is fitted at the bottom of the attachment. The tap is fed into the specific hole by the spindle, rotating it in clockwise direction. After the threads are cut, the spindle is released from the hole. The bottom of the attachment rotates in anti-clockwise direction causing no damage to the tapped hole. Tapping attachments are used during production work. *Fig. 2.16 illustrates a tapping attachment.*

2.9 Drilling machine operations

Though drilling is the primary operation performed in a drilling machine, a number of similar operations are also performed on holes using different tools.The different operations that can be performed in a drilling machine are:

1. Drilling
2. Reaming
3. Boring
4. Counterboring
5. Countersinking
6. Spot facing
7. Tapping
8. Trepanning

2.9.1 Drilling

Drilling is the operation of producing a cylindrical hole of required diameter and depth by removing metal by the rotating edge of a cutting tool called drill. Drilling is one of the simplest methods of producing a hole. Drilling does not produce an accurate hole in a workpiece. The internal surface of the hole generated by drilling becomes rough and the hole is always slightly oversize due to vibration of the spindle and the drill. A hole made by a drill of size 12mm will measure approximately upto 12.125mm and by a drill of size 22mm will measure upto 22.5mm. *Fig. 2.17 illustrates drilling operation.*

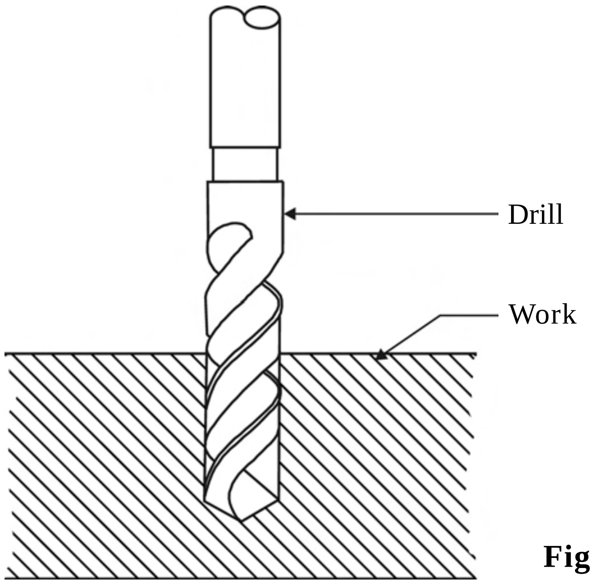

Fig 2.17 Drilling

2.9.2 Reaming

The size of hole made by drilling may not be accurate and the internal surface will not be smooth. Reaming is an accurate way of sizing and finishing a hole which has been previously drilled by a multi point cutting tool known as reamer.The surface obtained by reaming will be smoother and the size accurate. The speed of the spindle is made half that of drilling. Reaming removes very small amount of metal (approx 0.375 mm). In order to finish a hole and bring it to the accurate size, the hole is drilled slightly undersize. *Fig. 2.18 illustrates reaming operation.*

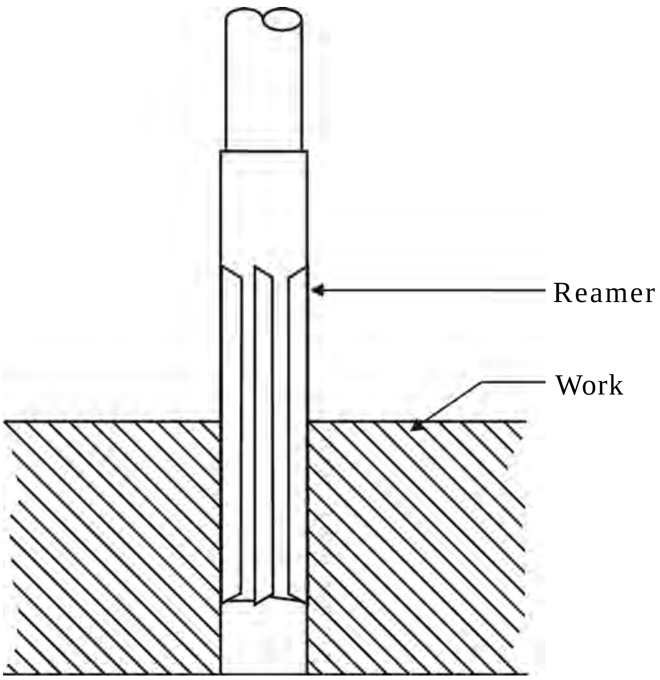

Fig 2.18 Reaming

2.9.3 Boring

Boring is the operation enlarging the diameter of the previously made hole. It is done for the following reasons.

1. To enlarge a hole by means of an adjustable cutting tool. This is done when a suitable sized drill is not available or the hole diameter is so large that is cannot be ordinarily drilled.

2. To finish a hole accurately and bring it to the required size

3. To machine the internal surface of the hole already produced in casting

4. To correct out of roundness of the hole

5. To correct the location of the hole as the boring tool follows independent path with respect to the hole

Boring tool is a tool with only one cutting edge. The tool is held in a boring bar which has a taper shank to fit into the spindle or a socket. For perfectly finishing a hole, the job is drilled undersize slightly. Boring operation in some precise drilling machine is performed to enlarge the holes to an accuracy of 0.00125mm. The spindle speed during boring should be adjusted to be lesser than that of reaming. *Fig. 2.19 illustrates boring operation.*

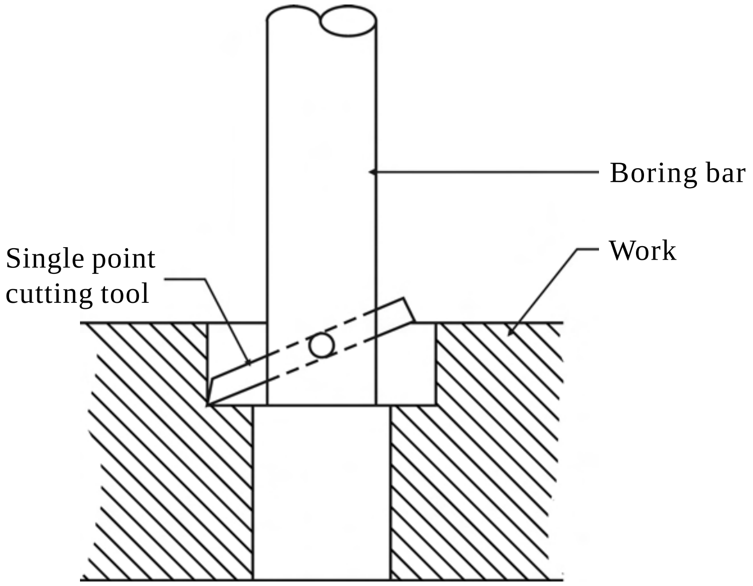

Fig 2.19 Boring

2.9.4 Counterboring

Counterboring is the operation of enlarging the end of the hole cylindrically. The enlarged hole forms a square shoulder with the original hole. This is necessary in some cases to accommodate the heads of bolts, studs and pins. The tool used for counter boring is known as counter bore.

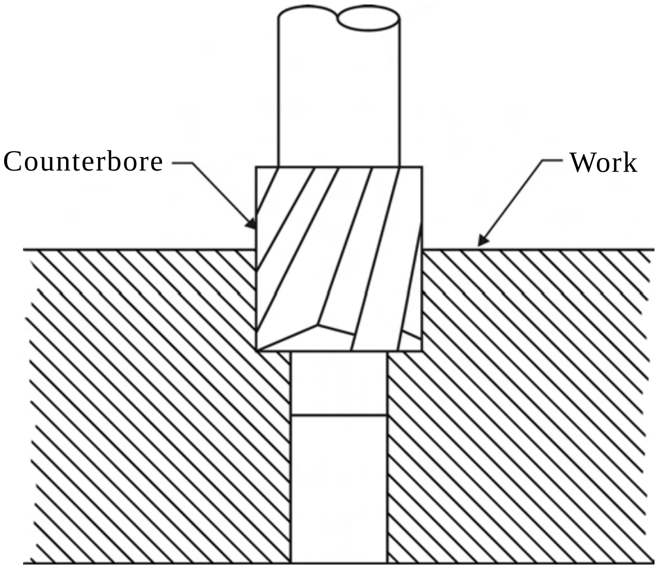

Fig 2.20 Counterboring

The counterbores are made with cutting edges which may be straight or spiral. The cutting speed for counterboring is atleast 25% lesser than that of drilling.

2.9.5 Countersinking

Countersinking is the operation of making a cone shaped enlargement at the end of the hole. The included angle of the conical surface may be in the range of 60° to 90°. It is used to provide recess for a flat headed screw or a counter sunk rivet fitted into the hole. The tool used for counter sinking is known as a countersink. It has multiple cutting edges on its conical surface. The cutting speed for countersinking is 25% lesser than that of drilling.

Fig.2.21 illustrates countersinking operation.

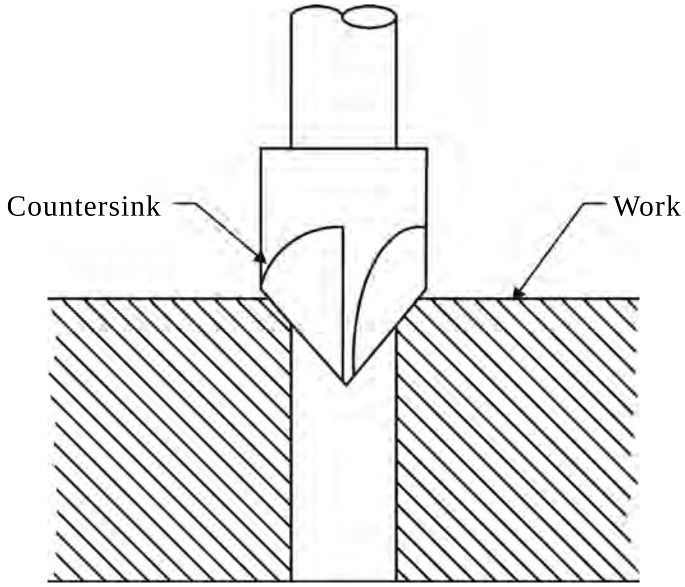

Fig 2.21 Countersinking

2.9.6 Spot facing

Spot facing is the operation of smoothing and squaring the surface around a hole. It is done to provide proper seating for a nut or the head of a screw. A counterbore or a special spot facing tool may be employed for this purpose.

Fig. 2.22 illustrates spot facing operation.

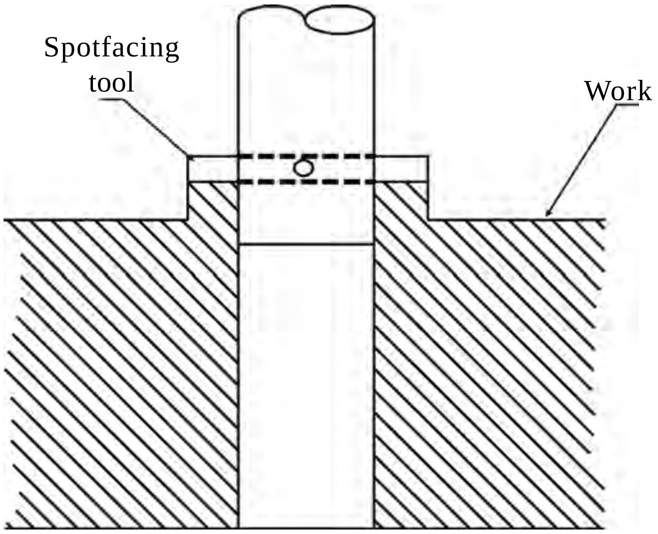

Fig 2.22 Spotfacing

2.9.7 Tapping

Tapping is the operation of cutting internal threads by means of a cutting tool called 'tap'. Tapping in a drilling machine may be performed by hand or by power. When the tap is screwed into the hole, it removes metal and cuts internal threads which will fit into external threads of the same size. *Fig. 2.23 illustrates tapping operation.*

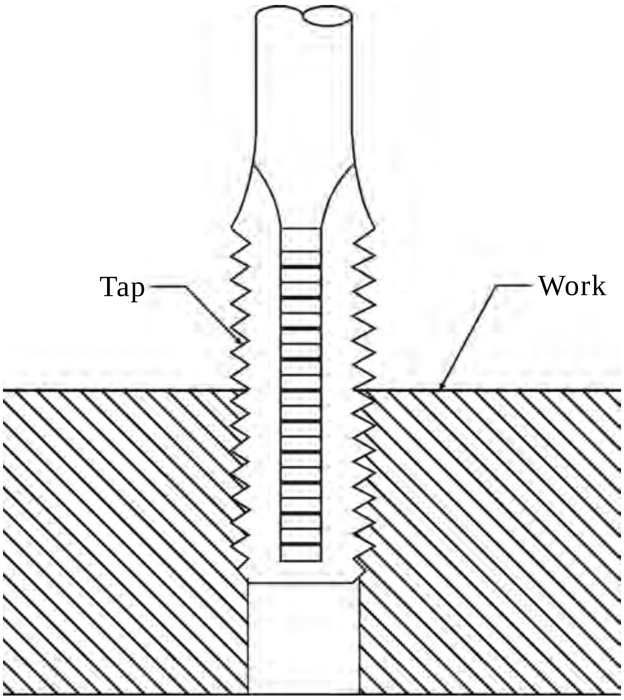

Fig 2.23 Tapping

2.9.8 Trepanning

Trepanning is the operation of producing a hole in sheet metal by removing metal along the circumference of a hollow cutting tool. Trepanning operation is performed for producing large holes. Fewer chips are removed and much of the material is saved while the hole is produced. The tool may be operated at higher speeds. The speed depends upon the diameter of the hole to be made. The tool resembles a hollow tube having cutting edges at one end and a solid shank at the other to fit into the drill spindle.

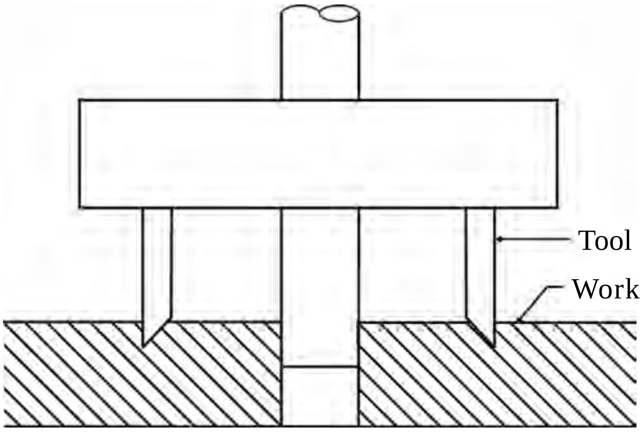

Fig 2.24 Trepanning

2.10 Cutting speed, Feed & Depth of cut

2.10.1 Cutting speed

Speed in general refers to the distance a point travels in a particular period of time. The cutting speed in a drilling operation refers to the peripheral speed of a point on the cutting edge of the drill. It is usually expressed in meters per minute. The cutting speed (v) may be calculated as

$$\text{Cutting speed(C.S)} = \frac{\pi dn}{1000} \text{ m per min}$$

Where

'd' - is the diameter of the drill in mm, and

'n' - is the speed of the drill spindle in r.p.m.

The cutting speed of a drill depends, as in other machining processes, upon several factors like the cutting tool material, the kind of material being drilled, the quality of surface finish desired, the method of holding the work, the size, type and rigidity of the machine.

Example

A drill of diameter 20mm makes a hole on a steel part at a cutting speed of 25m/min. Find out the spindle speed.

$$\text{Cutting speed(C.S)} = \frac{\pi dn}{1000} \text{ m per min}$$

$$25 = \frac{\pi \times 20 \times n}{1000} \quad \text{or } n = \frac{25 \times 1000}{\pi \times 20}$$

Spindle speed,n = 398 r.p.m

2.10.2 Feed

The feed of a drill is the distance the drill moves into the work at each revolution of the spindle. It is expressed in millimeters. The feed may also be expressed as feed per minute. The feed per minute may be defined as the axial distance moved by the drill into the work per minute. Feed depends upon factors like the material to be drilled, the rigidity of the machine, power, depth of the hole and the type of finish required.

2.10.3 Depth of cut

The depth of cut in drilling is equal to one half of the drill diameter. If 'd' is the diameter of the drill, the depth of cut (t) t = d/2 mm.

2.11 Safety precautions

It is necessary that no damage is done to the operator, the machine tool and the cutting tool. To ensure this, the following points are to be remembered.

1. The work should not be held by hand in any case.
2. Proper work holding device should be used to hold the work. If the work is not held properly, the work tends to rotate along with the drill causing damage to the operator, the machine tool and the cutting tool.
3. The shank of the drill should be cleaned before it is fitted into the spindle. The dirt on the shank may make the drill not to have a proper fit into the spindle. This will lead to breakage of drill.
4. The taper hole of the spindle should also be cleaned.
5. The shank of the drill should conform with the spindle hole.
6. Cutting speed and feed should be selected according to the prescribed range.
7. Care should be taken to ensure whether the belt and gears are connected properly.
8. Proper safety plates should be installed around rotating parts like belt drive and gears.
9. The operator should wear safety goggles while operating the drilling machine.
10. The machine should be disconnected from electric terminals when repairs are undertaken. In general, we should ensure the proper functioning of the machine tool.

QUESTIONS

I. A Choose the correct option

1. The drilling machine used in constructional work is
   a. bench drilling machine b. portable drilling machine
   c. gang drilling machine d. multiple spindle drilling machine
2. Reamer is a
   a. multi point cutting tool b. single point cutting tool
   c. parting tool d. saw teeth cutting tool

3. The lip clearance angle of a drill is

a. 59° b. 118° c. 12° to 15° d. 180°

4. The point angle of a drill is

a. 59° b. 118° c. 12° to 15° d. 180°

5. The number of revolutions of a spindle in one minute is known as

a. meters/min b. RPM c. TPI d. mm/stroke

I. B Answer the following questions in one or two words

1. Name the device used to guide the tool when drillling is performed on many numbers of identical workpieces.

2. Name the groove present on the drill.

3. What is the name of the device used in holding drills with straight shanks?

4. Name the device useful in holding a cylindrical workpiece on drilling machine table.

5. What type of a drilling machine is used to drill in the barrels of guns?

II. Answer the following questions in one or two sentences

1. State any two differences between the processes of reaming and boring.

2. Why is spotfacing done?

3. Define 'cutting speed' in a drilling machine.

4. Name any four work holding devices used in a drilling machine.

III. Answer the following questions in about a page

1. List out the types drilling machines.

2. Draw and explain a bench drilling machine.

3. How is the size of a drilling machine specified?

4. Explain any two drill holding devices.

IV. Answer the following questions in detail

1. Draw a neat diagram of a upright drilling machine and explain.

2. Explain the working of a drill spindle with a diagram.

3. Explain the construction of a radial drilling machine.

4. Explain any four work holding devices used in a drilling machine.

5. Explain the nomenclature of a twist drill with a diagram.

6. Explain any four operations performed in a drilling machine.

3. SHAPING MACHINE

3.1 Introduction

Shaping is a process of machining a flat surface which may be horizontal, vertical , inclined, concave or convex using a reciprocating single point tool. A shaping machine is a reciprocating type of machine tool. James Nasmith, an Englishman designed a shaping machine to produce flat surfaces in the year 1836.

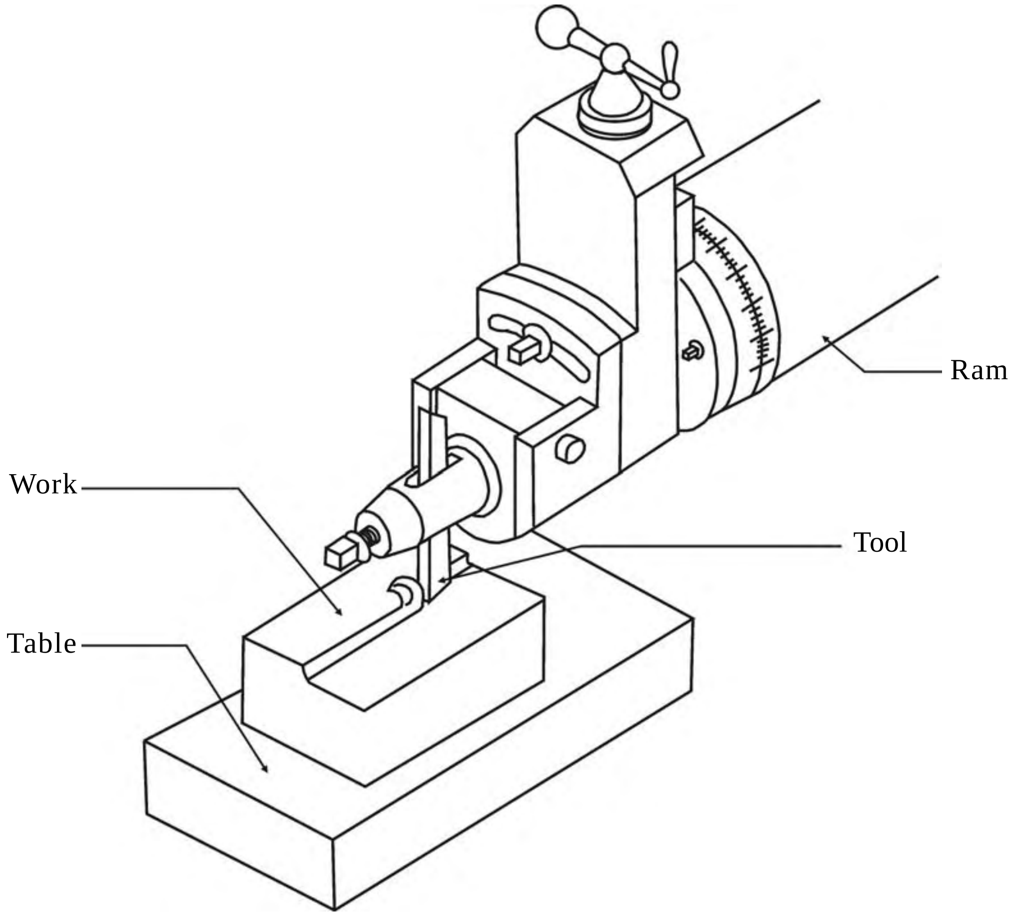

Fig 3.1 Shaping operation

3.2 Method of machining

The work is held firmly on the table and the ram is allowed to reciprocate over it. A single point cutting tool is attached to the ram. When the ram moves horizontally in the forward direction, the tool removes metal from the work. On the return stroke, metal is not removed. The ram moves at a slow speed during forward stroke. But during return stroke, the ram moves at a faster speed. Though the distances of ram movement during the forward and return stroke remain the same, the time taken by the return stroke is less as it is faster. It is possible by ‘Quick return mechanism’.

In a shaping machine, a flat horizontal surface is machined by moving the work mounted on the table in a cross direction to the tool movement. When vertical surfaces are machined, the feed is given to the tool.

When a inclined surface is machined, the vertical slide of the toolhead is swiveled to the required angle and the feed is given to the tool by rotating the downfeed hand wheel.

The method of machining in a shaper is illustrated in Fig 3.1

3.3 Main parts of a shaping machine

Base

The base is hollow and is made of cast iron. It provides the necessary support for all the other parts of the machine. It is rigidly bolted to the floor of the workshop.

Column

It is a box like casting mounted vertically on top of the base. Two accurate guideways are machined on the top of the column. The ram reciprocates on these guideways. The front face of the column is provided with two vertical guideways. They act as guideways for the crossrail. Crossrail moves vertically along these guideways. The column encloses the ram reciprocating mechanism and the mechanism for strokelength adjustment.

Crossrail

It is mounted on the front vertical guideways of the column. The table may be raised or lowered by adjusting the crossrail vertically. A horizontal cross feed screw is fitted within the crossrail.

The construction of a shaping machine is shown in Fig. 3.2

Table

It is an impotant part useful in holding the work firmly on it. It is mounted on the saddle which is located above the crossrail. The top and sides of the table are accurately machined and have T-slots. Workpieces are held on the table with the help of shaper vise, clamps and straps.

Ram

Ram supports the toolhead on its front. It reciprocates on the accurately machined guideways on the top of the column. It is connected to the reciprocating mechanism placed inside the column. The position of ram reciprocation may be adjusted according to the location of the work on the table.

Toolhead

The toolhead is fitted on the face of the ram and holds the tool rigidly. It provides vertical and angular feed movement of the tool. The swivel toolhead can be positioned at any required angle and the vertical slide can be moved vertically or at any desired angle to machine verical or inclined surfaces.

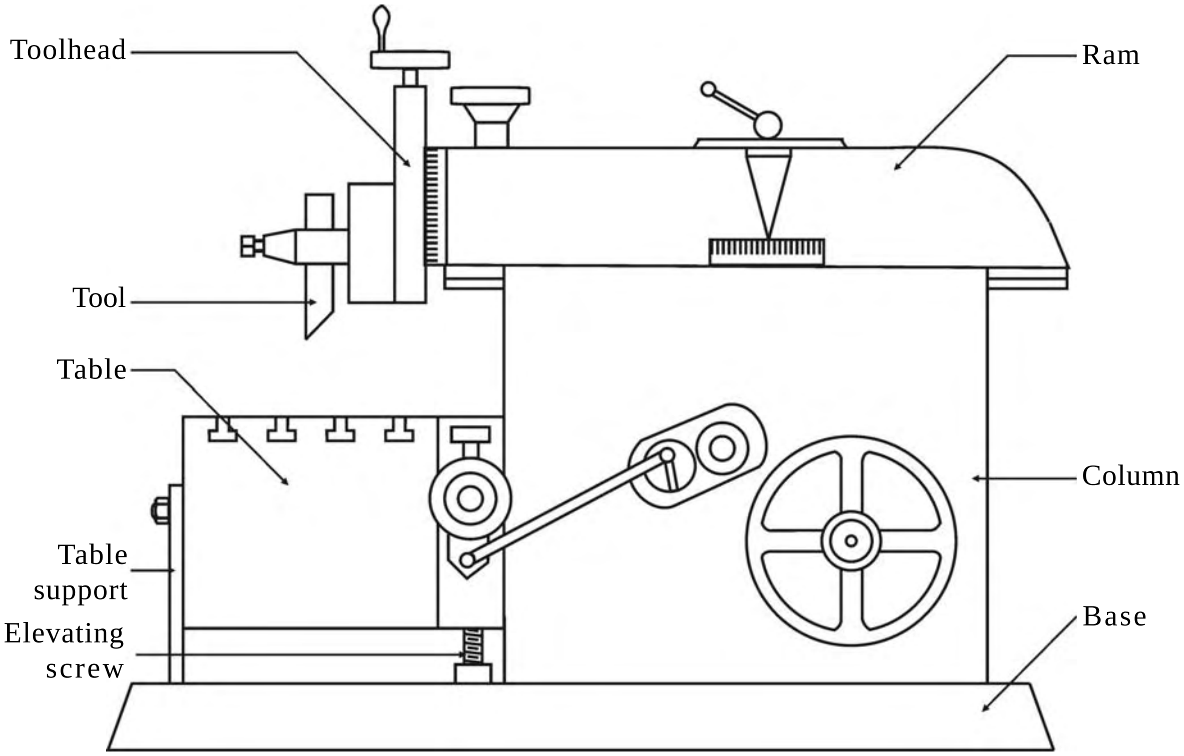

Fig 3.2 Shaping machine

3.4 Types of shaping machine

The shaping machines are classified as follows :

A. According to the type of driving mechanism

1. Crank type
2. Hydraulic type
3. Geared type

B. According to the design of the table

1. Plain shaper
2. Heavy duty shaper
3. Standard shaper
4. Universal shaper

C. According to the position and travel of ram

1. Horizontal shaper
2. Vertical shaper

D. According to the type of cutting stroke

1. Push cut shaper
2. Draw cut shaper

3.4.1 Crank type shaper

Crank and slotted link mechanism of a crank type shaper converts the rotation of an electric motor into reciprocating movement of the ram. Though the lengths of both the forward and return strokes are equal, the ram travels at a faster speed during return stroke. This quick return is incorporated in almost all types of shaper.

3.4.2 Hydraulic shaper

The ram of a hydraulic shaper is connected to a piston. Oil at high pressure is pumped to the cylinder of the hydraulic system. As the oil pushes the the piston, the ram reciprocates. Hydraulic shapers are high power machines and are used for heavy duty work.

3.4.3 Universal shaper

The universal shaper has a special type of table which can be swiveled and positioned at any angle about a horizontal axis. Apart from the cross and vertical travel, the table of a universal shaper can be swiveled to any angle to machine inclined surfaces. In the process, the position of the work in the table need not be changed. These machines are utilised in precision workshops.

3.5 Quick return mechanism

The ram moves at a comparatively slower speed during the forward cutting stroke. During the return stroke, the mechanism is so designed to make the tool move at a faster rate to reduce the idle return time. This mechanism is known as quick return mechanism.

As the ram moves at a faster rate during return stroke, the time taken becomes less. The total machining time decreases and the rate of production increases. The following mechanisms are used for quick return of the ram.

1. Crank and slotted link mechanism
2. Hydraulic mechanism
3. Whitworth mechanism

3.5.1 Crank and slotted link mechanism

An electrical motor runs the driving pinion(S) at a uniform speed. This pinion makes the bull gear(M) to rotate at a uniform speed. Bull gear is a large gear fitted inside the column. The point 'O' is the centre of the bull gear. A slotted link having a long slot along its length is pivoted about the point 'K'. A sliding block 'N' is fitted inside the slot and slides along the length of the slotted link. 'P' is the crank pin and 'OP' can be considered as a crank. *Fig. 3.3 shows the crank & slotted link mechanism.*

When the bull gear rotates, the sliding block also rotates in the crank pin circle. This arrangement provides a rocking movement to the rocker arm. As the top of the slotted link is connected to the ram, the ram reciprocates horizontally. So, bull gear rotation is converted into the reciprocating movement of the ram.

Quick return mechanism

As shown in the diagram, 'KA' indicates the starting point of the forward cutting stroke and 'KB' the end of the cutting stroke. The rotation of the crank 'OP' in clockwise direction through the angle P_1RP_2 refers to the forward cutting stroke. The rotation of the crank in the same direction through the angle P_2LP_1 refers to the return stroke. As the angle P_2LP_1 is smaller than the angle P_1RP_2, the time taken for the return stroke is less than that of forward stroke. So, it is evident that the speed at which the ram travels during return stroke is more.

$$\frac{\text{Time taken for forward cutting stroke}}{\text{Time taken for the idle return stroke}} = \frac{\text{angle } P_1RP_2}{\text{angle } P_2LP_1} = \frac{216°}{144°} = \frac{3}{2}$$

In some machines this ratio can be set as 7/5.

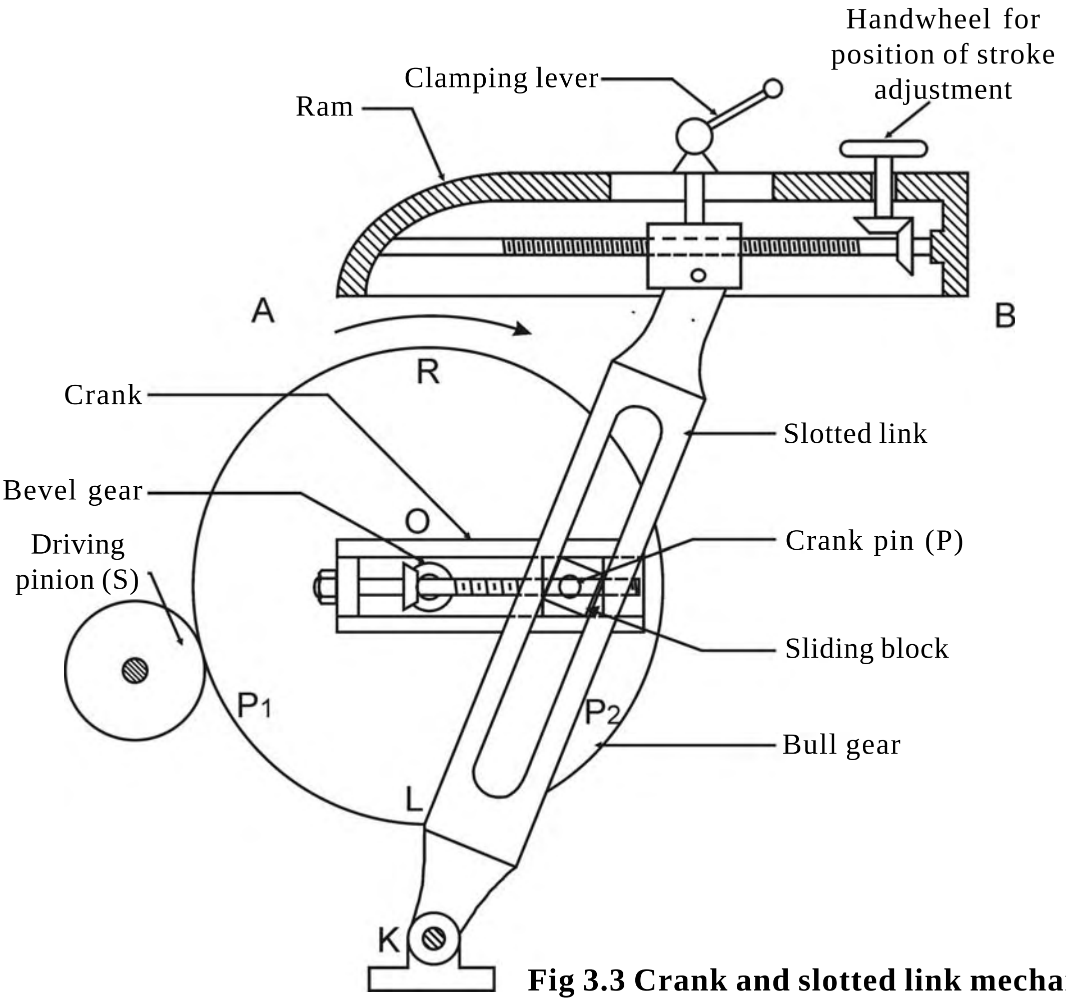

Fig 3.3 Crank and slotted link mechanism

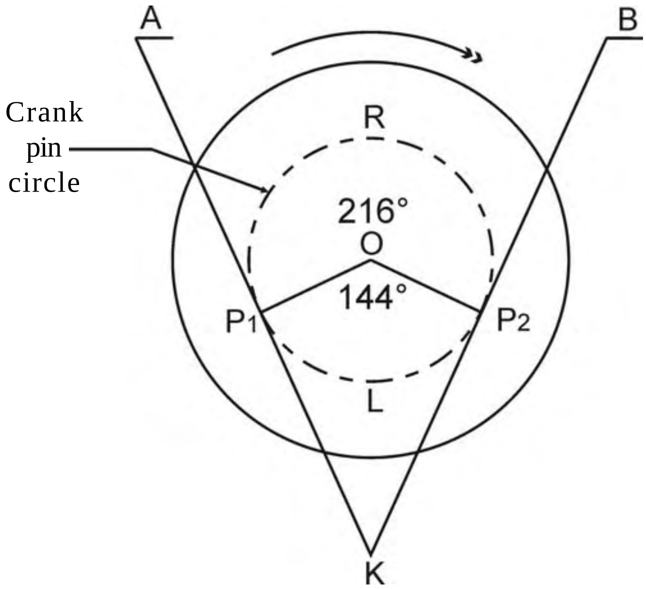

Fig 3.4 Quick return mechanism of the ram

The strokelength of a ram is the distance the ram moves forward or backward. It depends upon the distance between the centre of the bull gear and the centre of the sliding block. it is adjusted according to the length of the work.

Fig. 3.4 illustrates quick return mechanism.

3.6 The size of a shaper

The size of a shaper is determined by the maximum length of stroke it can make. Shapers with maximum strokelength of 175mm to 900mm are available. Machines with maximum strokelength of 300mm, 450mm and 600mm are used widely.

To specify the machine further, the following points are to be provided.

1. The type of drive
    a. Individual motor
    b. Belt driven
2. The method of obtaining different speeds
    a. Gear box
    b. Step cone pulley
3. Horse power of the motor
4. Cutting to return stroke ratio
5. Number and range of speed arrangement
6. The type of the table

3.7 Strokelength calculation and adjustment

The length of the stroke is calculated to be nearly 30mm longer than the work. The position of stroke is so adjusted that the tool starts to move from a distance of 25mm before the beginning of the cut and continues to move 5mm after the end of the cut. For example as shown in *Fig. 3.5*, the length of the work is 100mm. The strokelength of the ram is calculated to be 130mm. (25+100+5). *Fig. 3.5 illustrates the calculation of strokelength.*

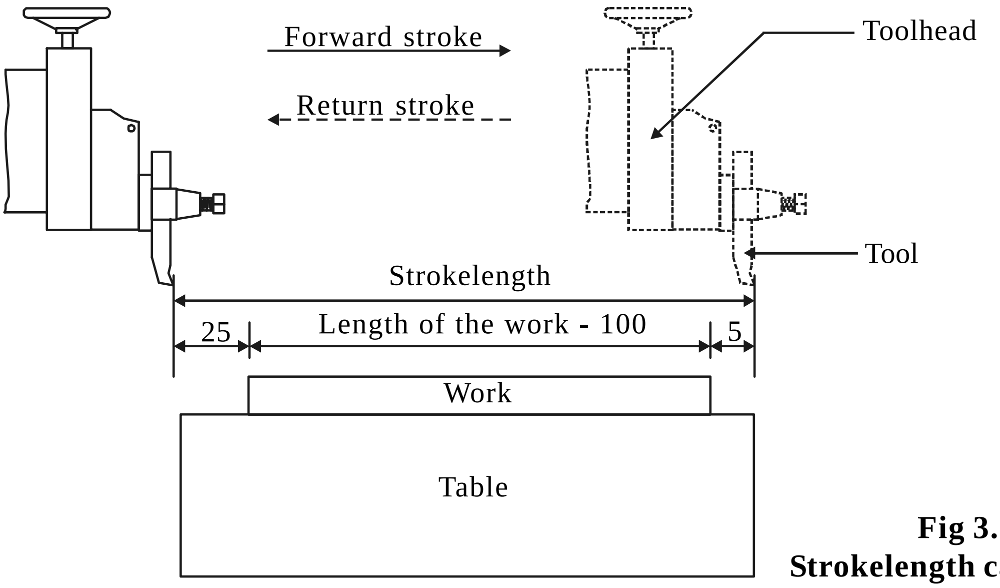

Fig 3.5
Strokelength calculation

Adjusting the strokelength

The crank pin fastened to the sliding block can be adjusted by a lever placed outside the column. Through the bevel gears placed at the centre of the bull gear, the radial slide lead screw can be rotated. This rotation of leadscrew changes the position of the sliding block to move towards or away from the bull gear centre. The strokelength of the ram is adjusted by placing the sliding block at a required position from the centre of the bull gear.

Note : The strokelength of the ram and its position should not be adjusted when the machine is in operation. The machine should be stopped before these adjustments are made.

3.8 Method of table movement

1. The table moves in a cross direction when the crossfeed screw is rotated.

2. A crank handle is provided to rotate the the crossfeed screw manually.

3. When the crossfeed screw is rotated in clockwise direction, the table will move towards left.

4. When the elevating screw is rotated, the table slides up and down on the face of the column.

5. As the handles meant for crossfeed screw rotation and elevating screw rotation are placed side by side, it is not possible to operate both of them at the same time.

6. The work mounted on the table is provided with required feed only during the end of the return stroke.

3.8.1 Ratchet and Pawl mechanism (Automatic feed mechanism for the table)

The table of a shaping machine travels in a cross direction when the crossfeed screw is rotated. The cross feed screw is attached to the ratchet wheel. A spring loaded ‘pawl’ is positioned to be placed between the teeth of the ratchet wheel. The pawl is housed within a frame known as rocker arm. The bull gear placed inside the column of the shaping machine drives the gear B through the gear A.

There is a diametric slot provided on the face of the gear B. A crank pin is attached to a slider placed in the slot. The bottom of the rocker arm and the crank pin are connected by a connecting rod. The rotation of the gear B makes the crank pin to rotate. This movement makes the rocker arm to rock about the centre of the ratchet wheel. The pawl makes the ratchet to rotate by a small amount in one direction only. As the cross feed screw is attached to the ratchet wheel, the rotation of the ratchet wheel will make the table to move in a cross direction.

If the direction of the table feed is to be reversed, the pawl is turned about 180° from its position. The ratchet wheel and the crossfeed screw will rotate in the opposite direction resulting in the table movement in the opposite direction.

Ratchet & pawl mechanism is shown in Fig. 3.6.

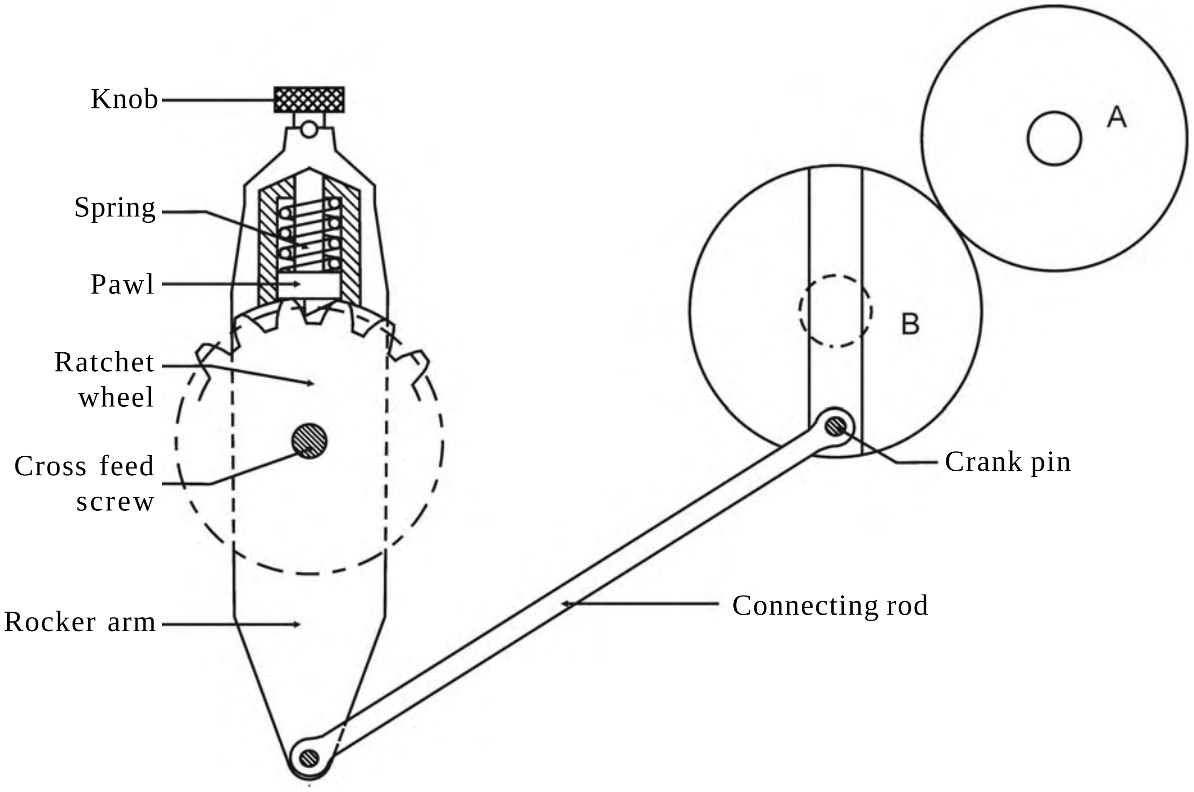

Fig 3.6 Ratchet and Pawl mechanism

When power feed is not necessary for the table, the pawl is disengaged from the ratchet wheel.

3.9 Swivel toolhead

The toolhead of a shaper holds the cutting tool rigidly. It is fitted on the face of the ram. The vertical slide of the toolhead can be moved vertically or at a particular angle to provide vertical and angular feed movement to the tool. It allows the tool to have an automatic relief during the return stroke of the ram.

The toolhead has a swivel base attached to the circular seat on the ram. The swivel base has angular graduations marked on it. As the vertical slide is mounted on the swivel base of the toolhead, it may be set and moved at any desired angle to machine angular surfaces like 'V' grooves and dove tail grooves.

The downfeed screw handle is rotated to move the vertical slide up and down. A graduated dial is placed on the top of down feed screw to control the amount of depth of cut or feed accurately.

Apron consisting of clapper box, clapper block and tool post is clamped on the vertical slide by a screw. By releasing the clamping screw, the apron can be swiveled either towards left or towards right with respect to the vertical slide. The clapper box has two vertical walls within which the clapper block is housed. It is connected to the clapper box with the help of a hinge pin. This arrangement provides relief to the tool while machining vertical or angular surfaces. The tool post is mounted upon the clapper block. The tool post is provided with a slot to accommodate the tool and a screw to hold the tool rigidly on the tool post.

The clapper block fits securely inside the clapper box to provide a rigid tool support during forward stroke. On the return stroke, a slight frictional drag of the tool on the work lifts the block out of the clapper box and prevents the tool cutting edge from dragging on the work surface. *Fig. 3.7 illustrates the swivel toolhead of a shaper.*

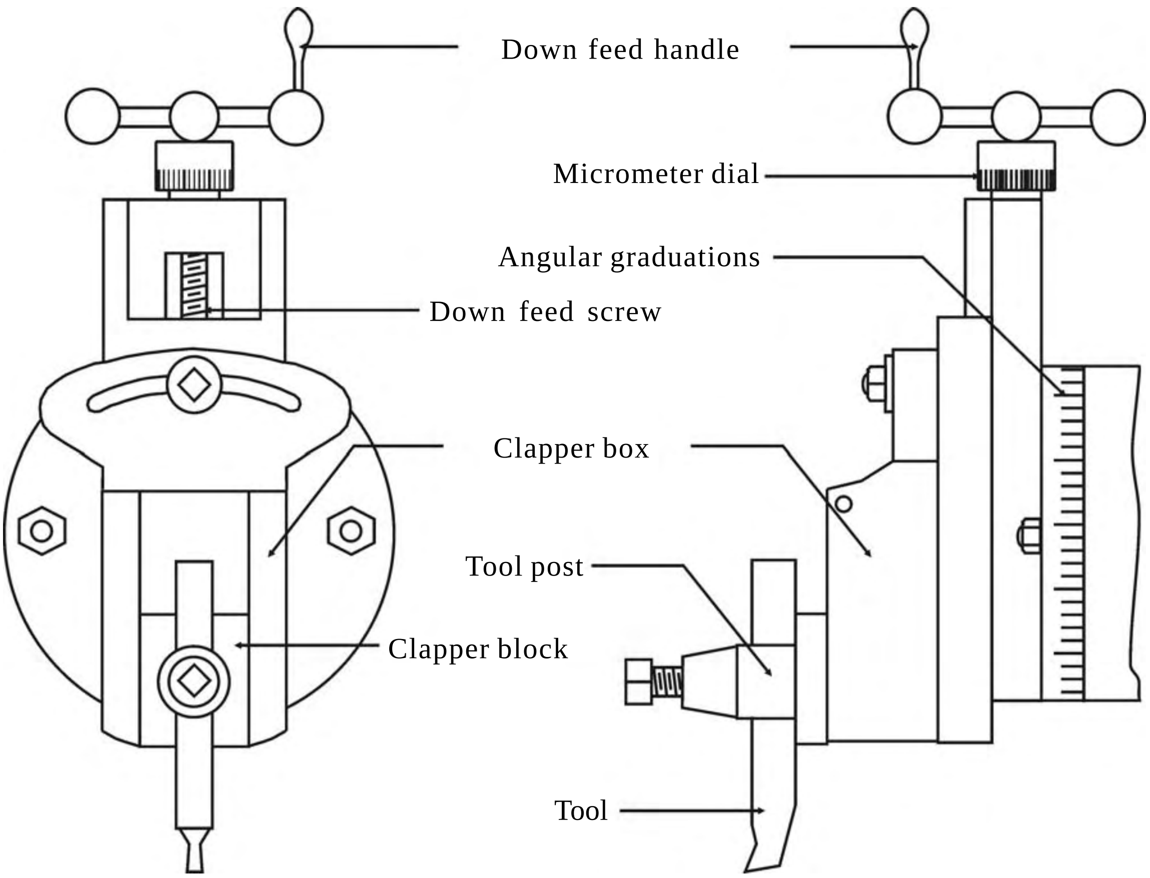

Fig 3.7 Swivel toolhead

3.10 Work holding devices

Workpieces can be held and supported on the shaper table directly or by having some special devices. Depending on the size and shape of the work, it may be supported on the table by any one of the following methods.

1. Shaper vise	4. Angle plate
2. Clamps and stop pins	5. V – Block
3. T-bolts and step blocks	6. Special fixtures

3.10.1 Vise

Vise is the most common and simple work holding device used in a shaper. Different types of vises are used in a shaping machine according to the need and they are :

1. Plain vise 2. Swivel vise 3. Universal vise

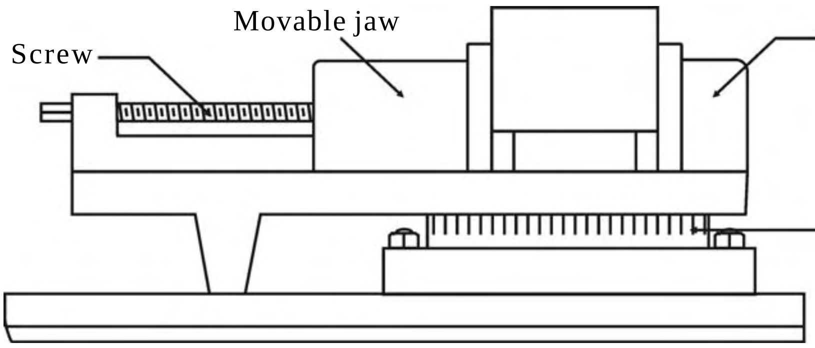

Fig 3.8 Shaper vice

3.10.2 Clamps and stop pins

T – bolts are fitted into the T - slots of the table. The work is placed on the table The work is supported by a rectangular strip at one end and by a stop pin at the other side. The screw is tightened to secure the work properly on the machine table. *The use of stop pin is shown in Fig. 3.9*.

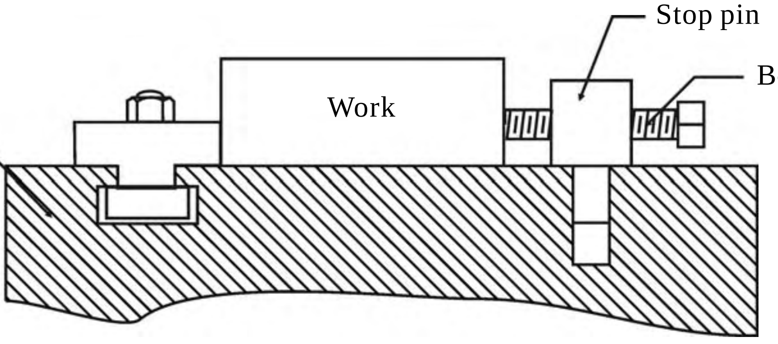

Fig 3.9 Use of stop pin

3.10.3 T-bolts and step blocks

The step blocks are used in combination with T-bolts and clamps to hold the work directly on the machine table. T-bolts are fitted in the T-slots of the machine table. One side of the clamp holds the work and the other side rests on a step of the step block. The different steps of the block are useful in levelling the clamp when holding works of different heights. A nut on the top of the clamp holds the work rigidly. *Fig. 3.10 shows 'T' bolt, clamp & step block.*

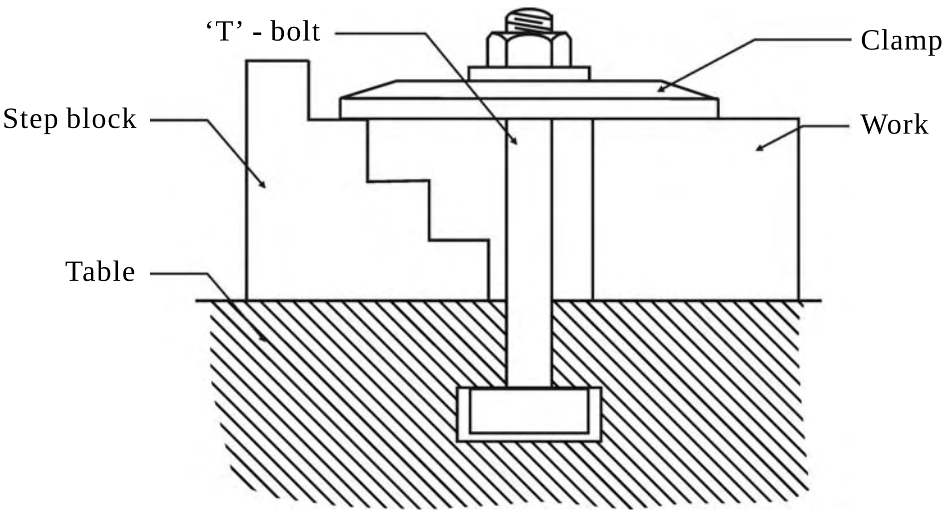

Fig 3.10 T- bolt, Clamp & Step block

3.10.4 Angle plate

Angle plate resembles the English alphabet 'L'. It is accurately machined to have two sides at right angles. Slots are provided on both the sides. One of the sides is bolted to the machine table and the workpieces are held on the other side. *The use of an angle plate is shown in Fig. 3.11*

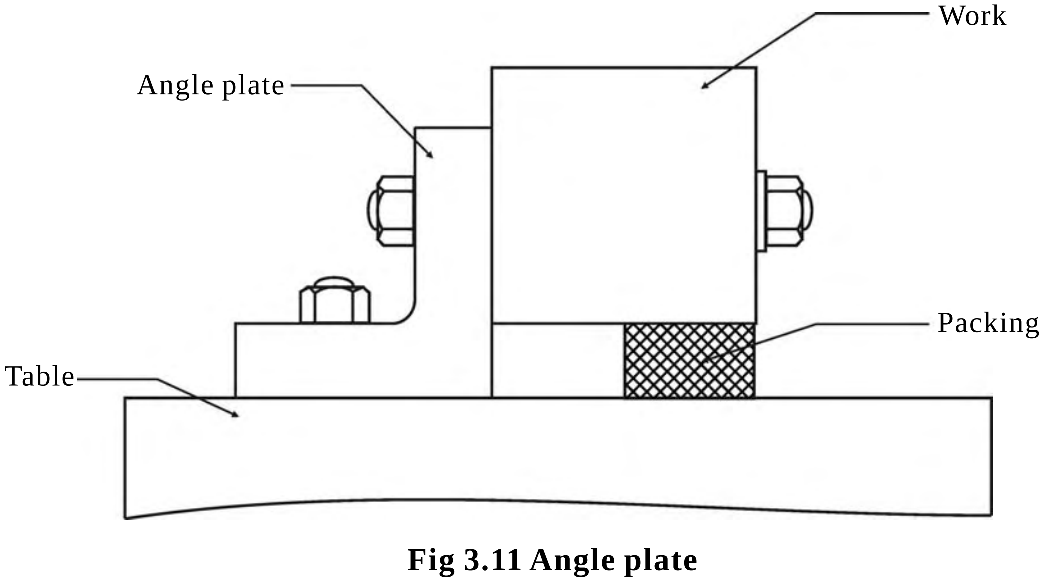

Fig 3.11 Angle plate

3.10.5 V – block

V – block is a metal block having a 'V' shaped groove on it. It is used for holding cylindrical workpieces. Operations like keyway cutting, slot cutting and machining flat surfaces can be performed on the cylindrical workpieces held on a 'V' block. *The use of a 'V' block is illustrated in Fig. 3.12.*

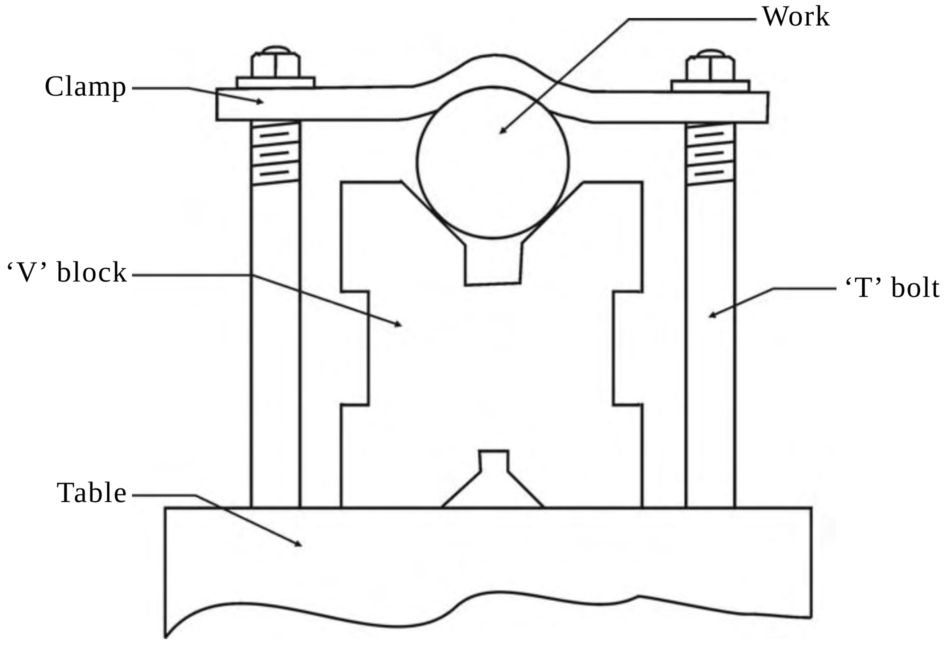

Fig 3.12 'V' block

3.10.6 Special fixtures

When internal keyways are to be machined on the holes, the work is held with a special fixture. The fixture has a V-block attached to it and the cylindrical work is mounted on it.

3.11 Tools used in a shaping machine

The material of the cutting tool used in a shaping machine should have more hardness and temper when compared to the material of the workpiece. So, the shaper tools are made of the following materials

1.High Carbon Steel

2. High Speed Steel

3. Carbide tipped tool

4. Stellite tool

3.11.1 Types of shaper tools

According to the type of work and the type of operation, various tools are used in a shaper. They are

Right hand (R. H) tool

This is a tool used for machining by moving the job from right to the left.

Left hand (L. H) tool

This is a tool used for machining by moving the job from left to right.

Roughing tool

When it is required to remove a good amount of material from the workpiece, roughing tools are used. The cutting edge will be very thick, sharp and strong to withstand the cutting pressure and to dissipate the heat generated at the cutting point. The surface obtained will be very rough.

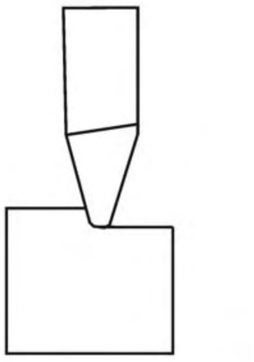

Round nose tool

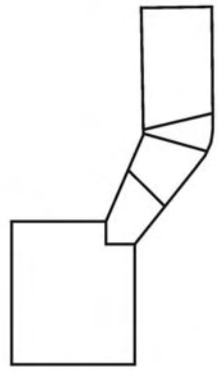

Roughing tool

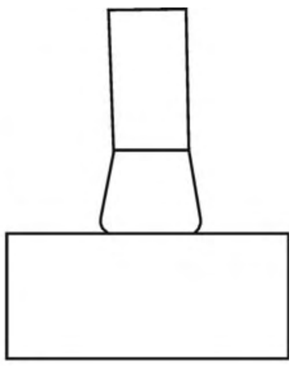

Finishing tool

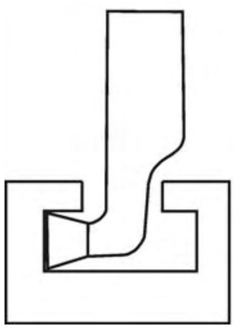

Side recessing tool

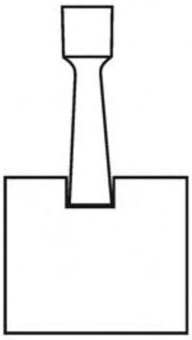

Slot cutting tool

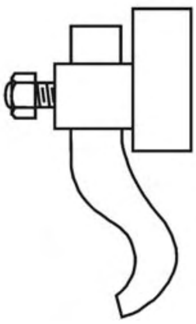

Goose neck tool

Fig 3.13 Shaper tools

Finishing tool

After the rough machining is performed, the finishing tool is used to obtain a very high quality of surface finish. The cutting edge will be either flat or slightly convex. *Different types of shaper tools are shown in Fig. 3.13.*

Goose neck tool

This is a special type of tool used for finish machining. Very good surface finish will be obtained. The cutting edge of goose neck tool has a springy action. The tip of the cutting edge lies in the same line with the rear side of the shank.

Slot cutting tool

Wide rectangular or square grooves are known as slots. Rough machining of the slot is carried out using round nose tool. After that, a slot cutting tool is used for finish machining work.

T-slot cutting tool

The central rectangular (or square) slot is first machined using rough machining tool and then by using parting tool (or slot cutting tool).After that, a T-slot cutting tool is used to machine underneath the rectangular groove.

Form tool

Form tools are made to suit some specific requirements for machining V shaped grooves or similar special shaped grooves in concave or convex form.

3.12 Setting of shaper table, vise and toolhead

The machining accuracy will not be perfect if the machine table and toolhead are not set properly. When the sides are perpendicular, it is referred as **squareness**. **Parallelism** means the two sides are absolutely parallel to each other. **Alignment** is an arrangement in which the relative positions of the table, the jaws of the vise, the toolhead and the ram are perfect. The above setting of the table, work and the tool are done with the help of test bars and feeler gauges.

3.13 Operations performed in a shaping machine

Different types of operations are performed in a shaping machine. They are broadly classified as

1. Regular operations 2. Special operations

Regular operations

3.13.1 Machining horizontal surfaces

A shaper is mostly used to machine a flat, true surface on a workpiece. Horizontal surfaces are machined by moving the work mounted on the machine table at a cross direction with respect to the ram movement. The clapper box can be set vertical or slightly inclined towards the uncut surface. This arrangement enables the tool to lift automatically during the return stroke. The tool will not drag on the machined surface.

Fig. 3.14 illustrates machining a horizontal surface

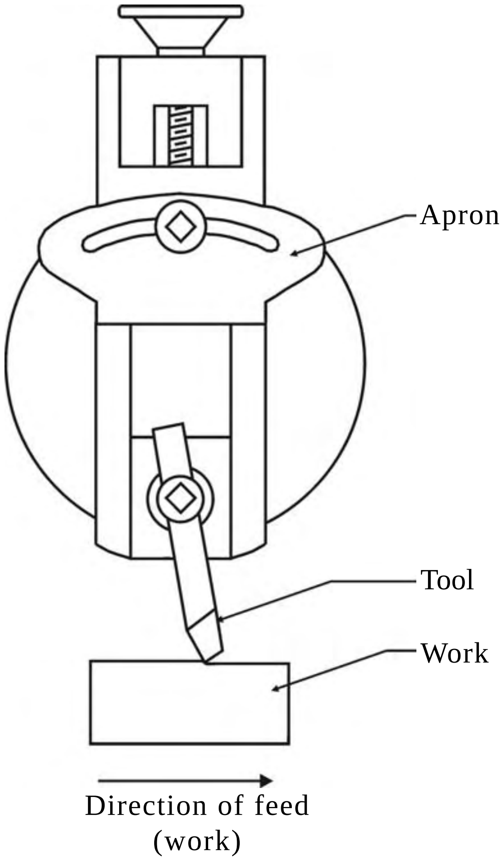

Fig 3.14 Machining a horizontal surface

3.13.2 Machining vertical surfaces

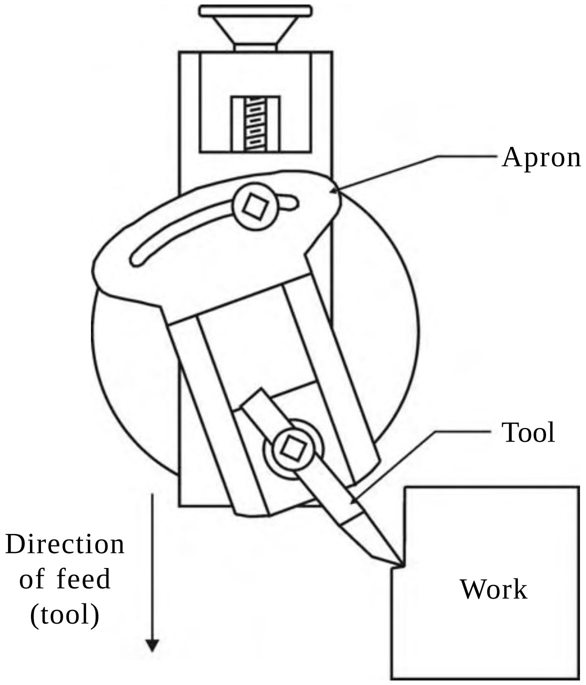

Fig 3.15 Machining a vertical surface

A vertical cut is made while machining the end of a workpiece, squaring up a block or machining a shoulder.

The feed is given to the tool by rotating the downfeed screw of the vertical slide. The table is not moved vertically for this purpose. The apron is swiveled away from the vertical surface being machined as shown in the diagram.

Fig. 3.15 illustrates machining a vertical surface.

3.13.3 Machining angular surfaces

If the surface to be machined is neither horizontal nor perpendicular, the surface is called inclined surface. Machining 'V' grooves and dovetail grooves are some examples for angular machining.

Machining the inclined (angular) surfaces can be done in several ways. They are

a) Taper strip method

The taper strip is positioned on the table and fixed. On the taper strip, the job is fixed and machined. The angular surface is obtained.

b) Layout method

Slanting surface is marked on the work piece. The job is positioned by suitable arrangement in such a way that the marked line is either horizontal or vertical. If the machining is carried out, the required angular surface is obtained.

c) Degree parallel method

Degree parallel block is a wedge shaped precision block for a particular angle. The degree parallel block is placed first on the table. Over and above that, the workpiece is positioned and the machining is done as usual to obtain the required angular surface.

d) Universal vice method

The job may be fixed in the universal vice and then the vice is swiveled to the required angular position. If the machining is carried out, the required slanting (angular) surface will be obtained.

e) Universal table method

If the universal table is available in the shaping machine, then the table can be tilted to the required position and the work is fitted on that. The machining is done as usual to obtain the required angular surface.

f) Swivel toolhead method

An angular cut is made at any angle other than a right angle to the horizontal or to the vertical plane. The work is set on the table and the vertical slide of the toolhead is swiveled to the required angle either towards left or towards right from the vertical position. The apron is then further swiveled away from the work to be machined. *Fig. 3.16 illustrates machining an angular surface by swivel toolhead method.*

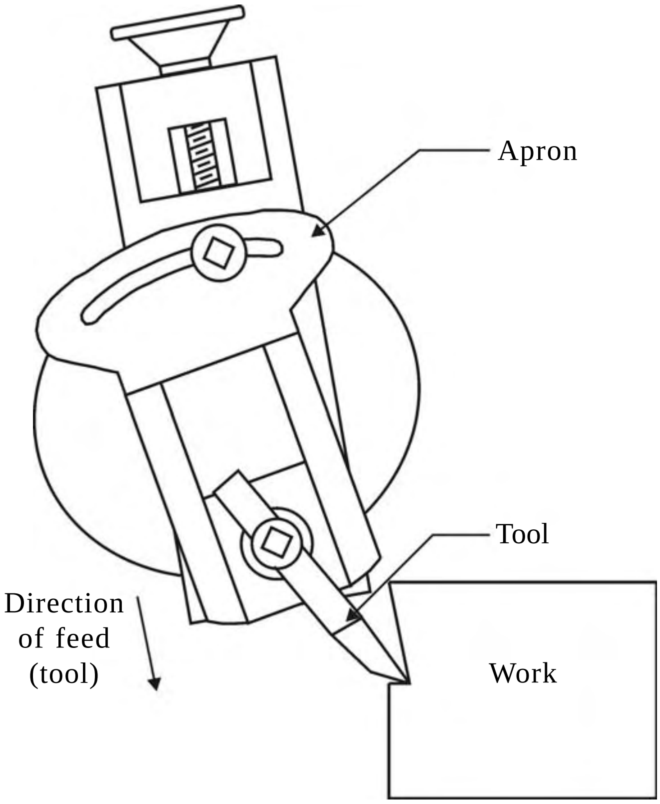

Fig 3.16 Machining a angular surface

Special operations

Apart from machining horizontal, vertical and vertical flat surfaces, the shaping machine can do some special machining operations. *Various shaping operations are shown in Fig. 3.17.*

3.13.4 Machining dove tail groove

Dove tail joint is machined on two separate pieces of work as male and female elements. The required shape is marked on the face of the work and the unwanted metal is first removed by the round nose tool. A special form tool is used to finish the machining.

3.13.5 Machining a 'V' block

The required shape of a 'V' block is marked on the face of the work and machining is done by any suitable method of angular machining.

3.13.6 Machining a tongue and groove joint

The male and female elements of the tongue and groove joint having vertical surfaces is machined after the exact shape is marked on the face of the work.

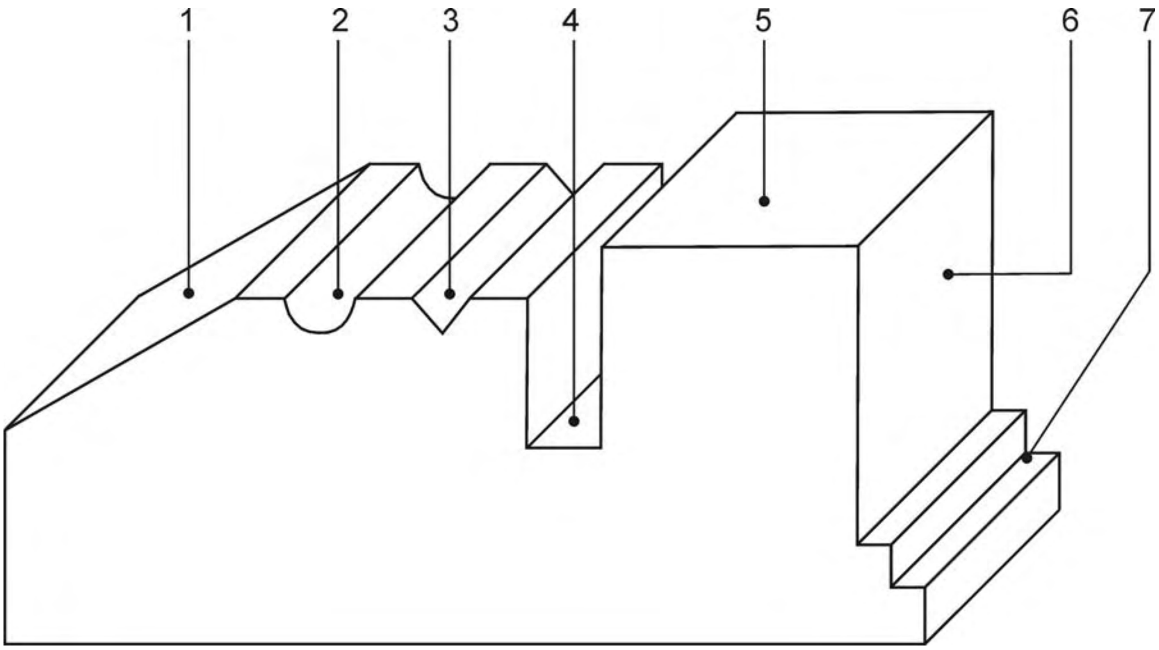

Fig 3.17 Various shaper operations

1. Inclined surface 2. Concave surface 3. 'V' groove 4. Deep slot 5. Horizontal surface 6. Vertical surface 7. Step cut surface

3.13.7 Machining external keyways

Machining external keyways refers to the cutting of long slots along the length of cylindrical rods. Initially a round nose tool is used and then a square nose tool is used to finish the operation. A hole of depth equal to the depth of the keyway is made at the blind end to leave a clearance to the tool at the end of the stroke. When a keyway is cut at the middle of the shaft, holes are drilled at both ends of the keyway.

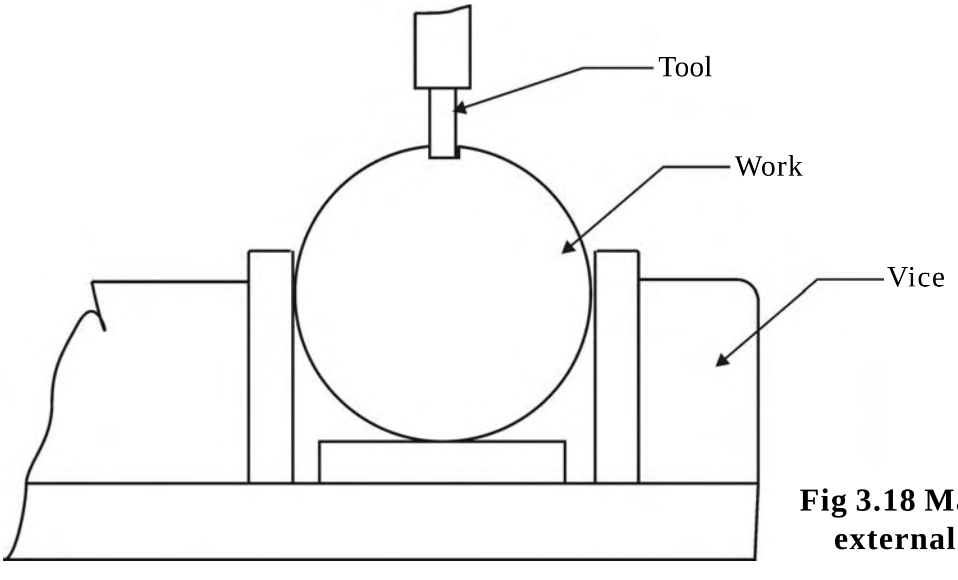

Fig 3.18 Machining a external keyway

3.13.8 Machining internal keyways

Internal keyways are cut inside the holes of gears and pulleys. It is done by holding the tool on a special tool holder called ‘snout bar’. The snout bar is directly fitted on the the clapper block.

Fig. 3.18 & Fig. 3.19 illustrate machining a external keyway and a internal keyway respectively..

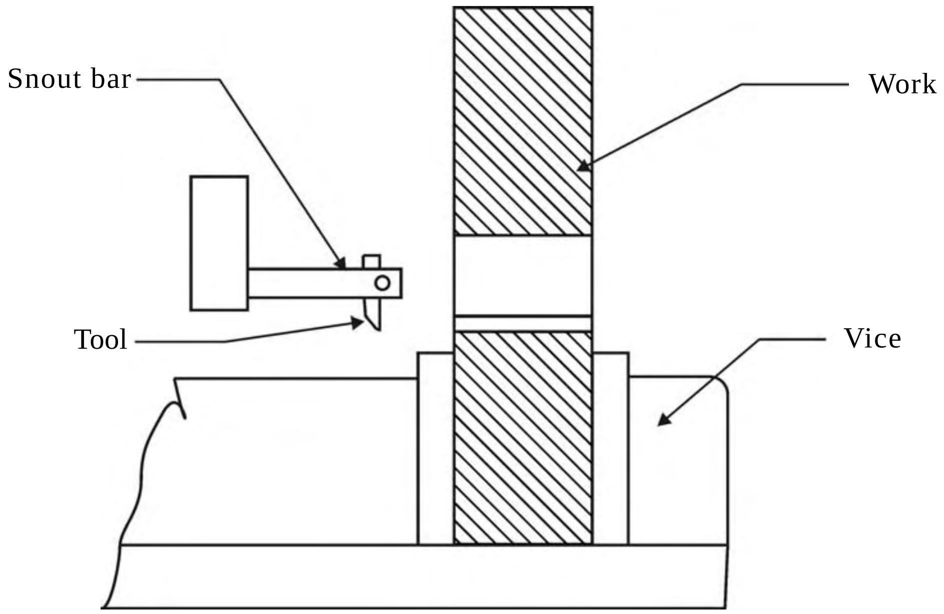

Fig 3.19 Machining internal keyway

3.13.9 T-slot machining

The shape of the T-slot is marked on the face of the work. A parting off tool is fitted on the toolpost and a rectangular slot is machined at the middle for the required depth. The broad base of the ‘T’ slot is machined by a T-slot cutting tool. *Fig. 3.20 illustrates machining a ‘T’ slot.*

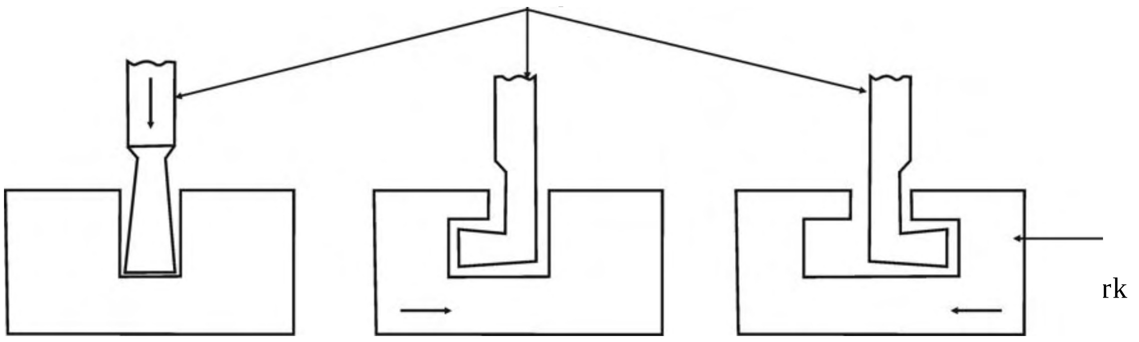

Fig 3.20 ‘T’ slot cutting

3.13.10 Machining a rack gear

Rack gear cutting is a process of cutting teeth elements at linear pitch on a flat piece of work. Firstly, the groove is machined with a square nose parting tool. Then, the groove is further machined with a form tool conforming the shape of the teeth.

3.13.11 Machining irregular surfaces

A shaper can also produce a contoured surface using a round nose tool. To produce a small contoured surface a forming tool is used. If the curve is sufficiently large, powered crossfeed along with manual down feed is so adjusted that the tool will trace the required contour.

3.14 Cutting speed, Depth of cut and Feed

3.14.1 Cutting speed

The distance an object travels in a particular period of time is known as speed. In a shaper, the cutting speed is the speed at which the metal is removed by the cutting tool in a period of one minute. In a shaper, the cutting speed is considered only during the forward cutting stroke. This is expressed in metre per minute.

The cutting speed differs to suit different different machining conditions like work material, the finish required, the type of the tool and the rigidity of the machine.

3.14.2 Depth of cut

Depth of cut (t) is the thickness of metal that is removed during machining. It is the perpendicular distance measured between the machined surface and the uncut surface of the workpiece. It is expressed in mm or in inches.

3.14.3 Feed

Feed (S) is the relative movement of the work or tool in a direction perpendicular to the axis of reciprocation of the ram per double stroke. It is expressed in mm per stroke.

3.15 Coolant

Due to the friction between the tool and the work surface during machining, heat is generated. The tool loses its cutting capacity and the machined surface is hardened. Coolant is used on the surfaces to avoid damage to the cutting edge of the tool as well as to the machined surface.

Soluble oil is mixed with water to be used as a suitable coolant. One part of the oil is mixed with fifteen parts of water to be used as coolant. Usage of water as coolant may result in rust formation on the metal parts. Lubricants cannot be used as coolants.

3.16 Safety precautions

The following safety precautions should be observed while working on a shaping machine.

3.16.1 Safety precautions regarding operators

1. No alteration or adjustment should be done on the machine parts while the machine is functioning.
2. Clamps holding the work should not be adjusted while the machine is in operation.
3. The machine is to be stopped before cleaning the metal chips.
4. The sharp edges of the work should be handled with care.
5. The measuring of the work should be done only after the machine is switched off.
6. The operator should not seek the assistance of others for starting and stopping the machine.
7. Machining of precise parts and internal surfaces of the workpiece are to be carried out with great care and attention.
8. The operator should stay away from direction of the ram movement.

3.16.2 Safety hints regarding the shaping machine

1. The workpiece is to be positioned in such a way that the ram will not hit the workpiece while performing the forward stroke.
2. Strokelength of the ram and the position of stroke are to be set correctly before performing the operation.
3. Proper holding of the work should be ensured. Work holding devices like clamps and vice jaws should not come in the way of the reciprocating tool.
4. We have to ensure that the tool or the tool post or the ram will not hit the job or the job holding clamps or the vise jaws.
5. The machine should be stopped before making any adjustment to the strokelength, position of stroke, apron and tool position.

QUESTIONS

I. A. Choose the correct option

1. The shaping machine was developed by
   a. Henry Maudslay   b. Eli Whitney
   c. Michael Faraday   d. James Nasmith
2. The operation mainly done on a shaping machine is
   a. turning   b. drilling
   c. machining a flat surface   d. thread cutting
3. The mechanism used to move the shaper table automatically is
   a. back gear mechanism
   b. crank & slotted link mechanism
   c. tumbler gear mechanism
   d. ratchet & pawl mechanism
4. The part involved in reciprocation by quick return is
   a. table   b. ram   c. column   d. crossrail
5. The ratio of forward stroke time to return stroke time is
   a. 3 : 2   b. 5 : 3   c. 1 : 3   d. 1 : 2

I. B. Answer the following questions in one or two words

1. What type of surfaces are machined on a shaper?
2. Which stroke of the shaper is faster?
3. What is the use of ratchet & pawl mechanism?
4. What type of cutting tool is used in a shaper - a single point or a multi-point?
5. Which part of the shaper is involved in automatic lifting of the tool during return stroke of the ram?

II. Answer the following questions in one or two sentences

1. Name any four important parts of a shaping machine.
2. What is the use of crank & slotted link mechanism?
3. Define ‘feed’ in a shaping machine.
4. Name any two points in specifying the size of a shaping machine.
5. What is the use of a clapper box?
6. What is the use of swivel toolhead of a shaping machine?

III. Answer the following questions in about a page

1. List out the types shaping machines.
2. Write short notes on
   a. Changing the strokelength of the ram
   b. Position of the ram
3. Explain any two work holding devices used in a shaping machine with diagrams.
4. List out the types of tools used in a shaping machine.
5. Explain any two operations performed in a shaping machine with diagrams.

IV. Answer the following questions in detail

1. Draw a neat diagram of a shaping machine and explain its important parts.
2. Explain the crank & slotted link mechanism of quick return of the ream with a diagram.
3. Explain the ratchet & pawl mechnism with a diagram.
4. Explain any four work holding devices used in a shaping machine with diagrams.
5. Explain any four operations performed in a shaping machine with diagrams.

4. GRINDING MACHINE

4.1 Introduction

Grinding is a metal cutting operation like any other process of machining removing metal in comparatively smaller volume. The cutting tool used is an abrasive wheel having many numbers of cutting edges. The machine on which grinding the operation is performed is called a grinding machine.

Grinding is done to obtanin very high dimensional accuracy and better appearance. The accuracy of grinding process is 0.000025mm. The amount of material removed from the work is very less.

4.2 Types of grinding machines

According to the accuracy of the work to be done on a grinding machine, they are classified as

1. Rough grinding machines
2. Precision grinding machines

4.2.1 Rough grinding machines

The rough grinding machines are used to remove stock with no reference to the accuracy of results. Excess metal present on the cast parts and welded joints are removed by rough grinders. The main types of rough grinders are

1. Hand grinding machine
2. Bench grinding machine
3. Floor stand grinding machine
4. Flexible shaft grinding machine
5. Swing frame grinding machine
6. Abrasive belt grinding machine

4.2.2 Precision grinding machines

Precision grinders are used to finish parts to very accurate dimensions. The main types of precision grinders are:

1. Cylindrical grinding machines
2. Internal grinding machines
3. Surface grinding machines
4. Tool and cutter grinding machines
5. Special grinding machines

4.2.3 Cylindrical grinding machine

Cylindrical grinders are generally used to grind external surfaces like cylinders, taper cylinders, faces and shoulders of work. There are two types of cylindrical grinding machines and they are

1. External cylindrical grinding machines
2. Internal cylindrical grinding machines

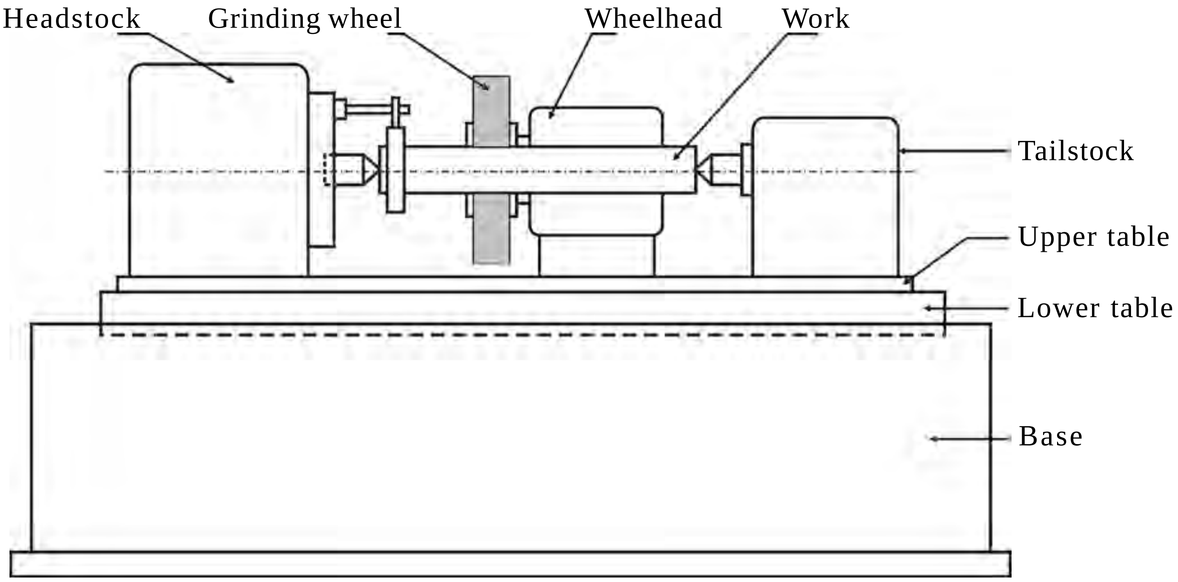

Fig 4.1 Cylindrical grinding machine

External cylindrical grinding machine

Cylindrical centre type grinders are intended primarily for grinding plain cylindrical parts. *Fig.4.1 illustrates a cylindrical grinder.*

Base

The base is made of cast iron and rests on the floor. It supports the parts mounted on it. The top of the base is accurately machined and provides guideways for the table to slide on. The base contains the table driving mechanisms.

Tables

The tables are mounted on top of the base. There are two tables namely lower table and upper table. The lower table slides on the guideways on the bed. It can be moved by hand or by power within required limits.

The upper table can be swiveled upto $\pm 10^{\circ}$ and clamped in position. Adjustable dogs are clamped in longitudinal slots at the side of the lower table. They are set up to reverse the table at the end of the stroke.

Headstock

The headstock is situated at the left side of upper table. It supports the workpiece by means of a centre and drives it by means of a dog. It may hold and drive the workpiece in a chuck. It houses the mechanism meant for driving the work. The headstock of a universal grinding machine can be swiveled to any required angle.

Tailstock

The tailstock is situated at the right side of the table. It can be adjusted and clamped in various positions to accommodate different lengths of workpieces.

Wheelhead

The wheelhead may be moved at right angles to the table ways. It is operated by hand or by power to feed the wheel to the work.The wheelhead carries a grinding wheel.

Its driving motor is mounted on a slide at the top and rear of the base. The grinding wheel rotates at about 1500 to 2000 r.p.m.

Internal cylindrical grinding machines

Internal grinders are useful in grinding cylindrical holes and taper holes.

4.2.4 Surface grinding machines

Surface grinding machines are employed to finish plain or flat surfaces horizontally, vertically or at any angle.

There are four different types of surface grinders. They are

1. Horizontal spindle and reciprocating table type
2. Horizontal spindle and rotary table type
3. Vertical spindle and reciprocating table type
4. Vertical spindle and rotary table type

Horizontal spindle surface grinding machine

The majority of surface grinders are of horizontal spindle type. In the horizontal type of the machine, grinding is performed by the abrasives on the periphery of the wheel. Though the area of contact between the wheel and the work is small, the speed is uniform over the grinding surface and the surface finish is good. The grinding wheel is mounted on a horizontal spindle and the table is reciprocated to perform grinding operation.

Base

The base is made of cast iron. It is a box like casting which houses all the table drive mechanisms. The column is mounted at the back of the base which has guideways for the vertical adjustment of the wheelhead.

Saddle

Saddle is mounted on the guideways provided on the top of the base. It can be moved at cross towards or away from the column.

Table

The table is fitted to the carefully machined guideways of the saddle. It reciprocates along the guideways to provide the longitudinal feed. The table is provided with 'T'- slots for clamping workpieces directly on the table or for clamping grinding fixtures or magnetic chuck.

Wheelheead

An electric motor is fitted on the wheelhead to drive the grinding wheel. The wheelheed is mounted on the guideways of the column, which is secured to the base. It can be raised or lowered with the grinding wheel to accommodate workpieces of different heights and to set the wheel for depth of cut.

Fig.4.2 illustrates a horizontal spindle surface grinding machine.

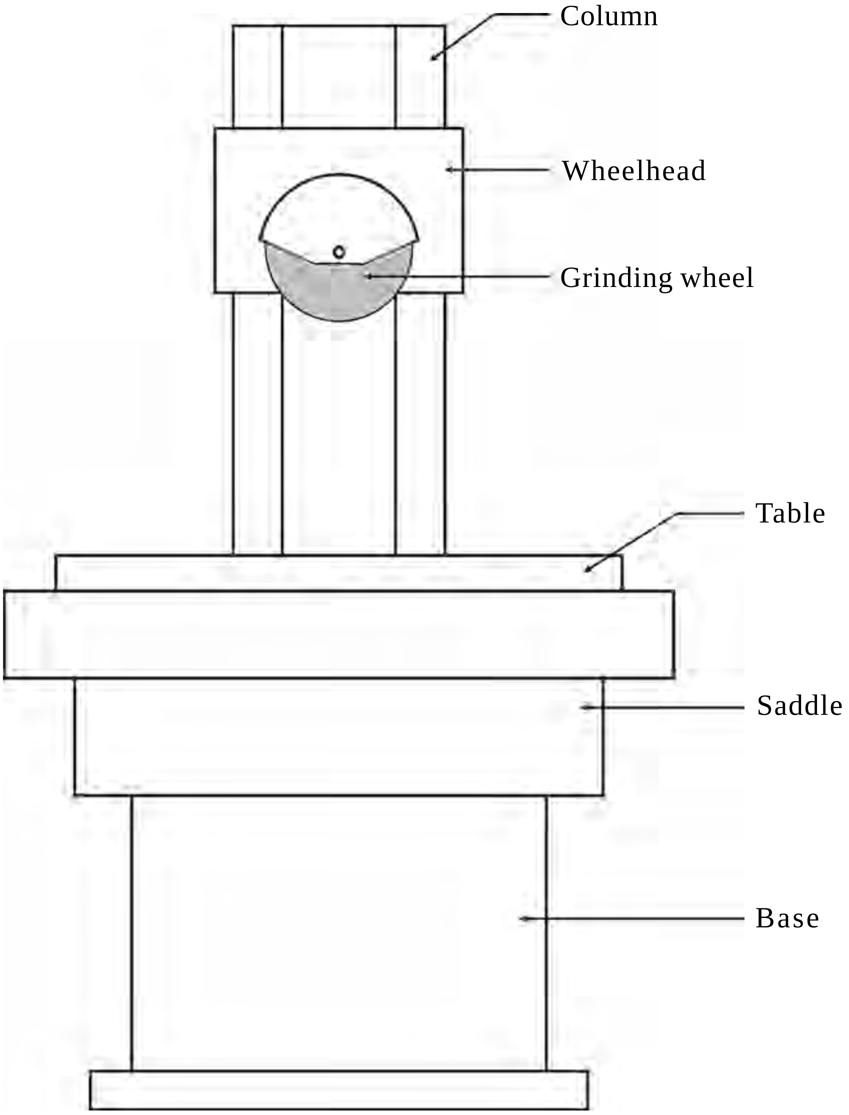

Fig 4.2 Horizontal spindle surface grinder

Vertical spindle surface grinding machine

The face or sides of the wheel are used for grinding in the vertical type surface grinders. The area of contact is large and stock can be removed quickly. But a criss-cross pattern of grinding scratches are left on the work surface. Considering the quality of surface finish obtained, the horizontal spindle type machines are widely used.

The grinding wheel is mounted on the vertical spindle of the machine. The work is held on the table and grinding is done.

The base of the machine is a box like casting. The base is very similar to the one of the horizontal spindle type. It houses all the table drive mechanisms.

The table is mounted on the base on top of which a magnetic chuck is mounted. A grinding wheel is mounted on the wheelhead which slides vertically on the column. The table is made to reciprocate or rotate to bring the work surface below the grinding wheel to perform grinding.

Fig.4.3 illustrates a vertical spindle surface grinding machine.

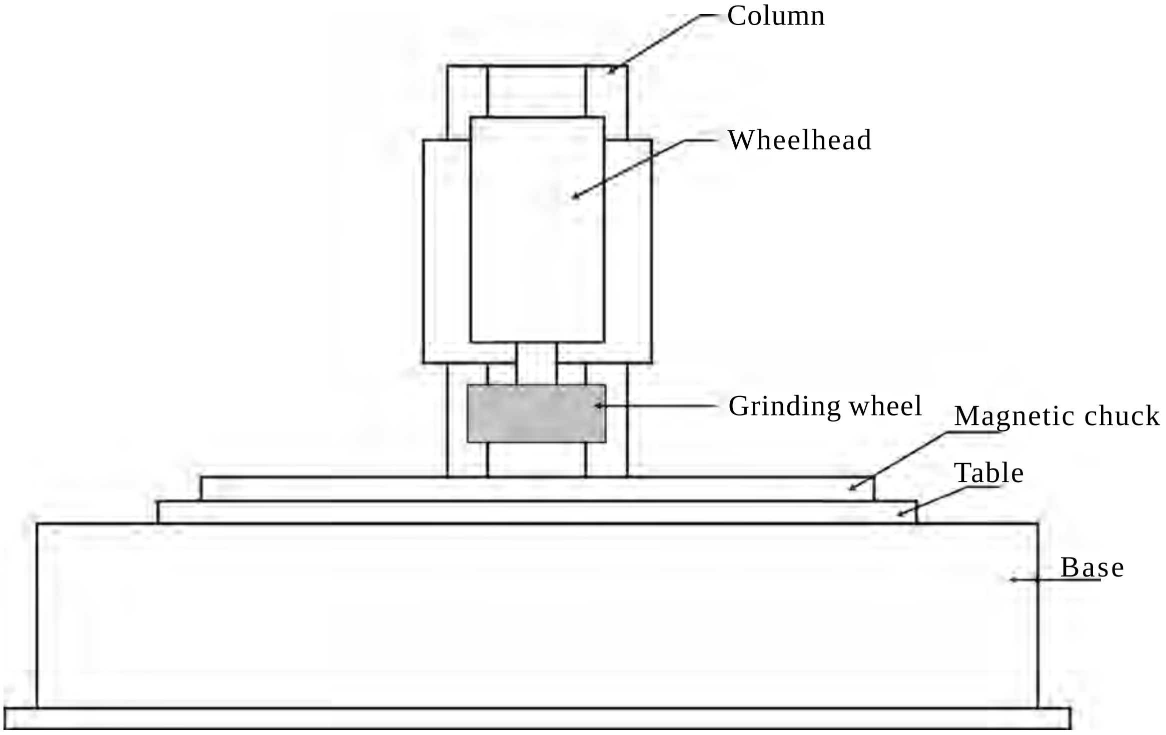

Fig 4.3 Vertical spindle surface grinder

4.2.5 Tool and cutter grinding machines

Tool and cutter grinders are used mainly to sharpen the cutting edges of various tools and cutters. The can also do surface, cylindrical and internal grinding to finish jigs, fixtures, dies and gauges.

Base

The base of the machine gives rigidity and stability to the machine. It is bolted rigidly to the floor of the shop by bolts and nuts. It supports all the other parts of the machine. It is box type and houses all the mechanisms for the saddle movements.

Saddle

The saddle is mounted directly on the top of the base and slides over it. The column is mounted on the saddle. It can be moved up and down and swivelled to either side.

Table

The table resets and moves on a top base, which is mounted over the saddle. The table has two layers. The worktable is mounted on the sub table which has 'T' slots for mounting the work and attachments used on the machine. The worktable can be swiveled while grinding tapers.

Headstock and tailstock

The headstock and tailstock are mounted on either side of the table. The workpieces are positioned between centres and driven exactly as in a cylindrical grinder.

Wheelhead

The wheelhead is mounted on a column on the back of the machine. It can be swiveled and positioned in the base for different set-up. A straight wheel and a cup wheel are mounted on either sides of the wheelhead. *Fig.4.4 illustrates a tool and cutter grinding machine.*

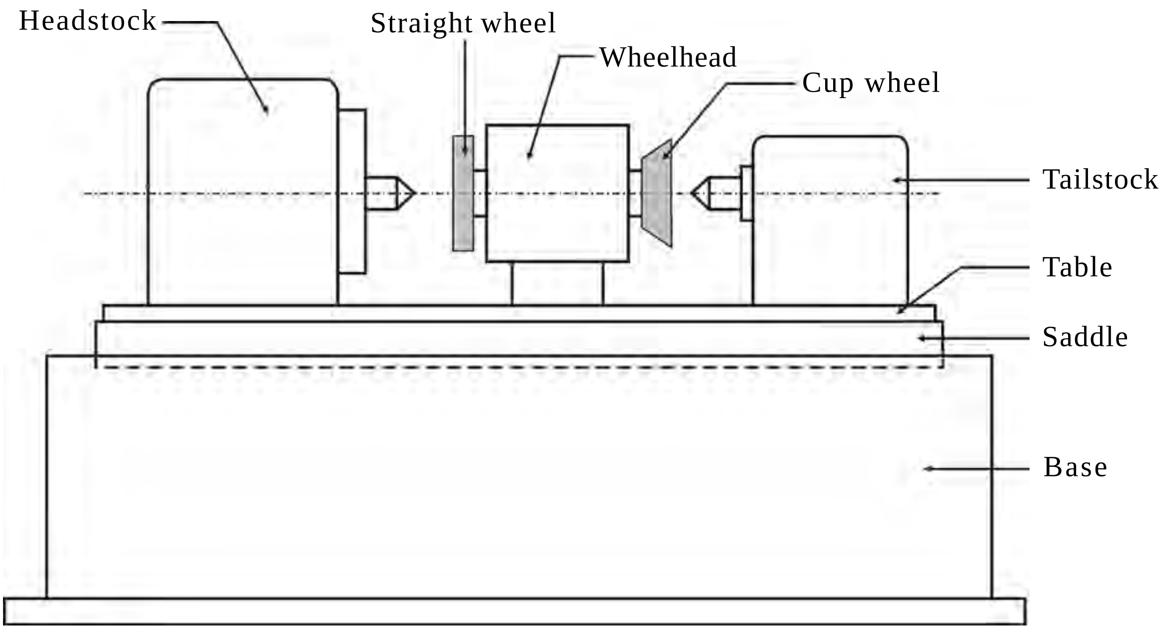

Fig 4.4 Tool and cutter grinder

4.3 Size of a grinding machine

The size of a grinding machine is specified according to the size of the largest workpiece that can be mounted on the machine.

The cylindrical centre type grinding machine is specified by the diameter and length of the largest workpiece the machine can accommodate between centers.

The internal centre type grinder is specified by the diameter of workpiece that can be swung and the maximum length of the stroke of the grinding wheel.

The reciprocating table type surface grinders are specified by the table area and the maximum height of the grinding wheel from the table surface. The rotary table type surface grinder is specified by the diameter of the chuck or table. A tool and cutter grinder is specified further by the maximum size of tool that can be sharpened and dressed.

4.4 Centreless grinding

Centreless grinding is a method of grinding external cylindrical, tapered and formed surfaces on workpieces that are not held and rotated between centres or in chucks. There are two types of centreless grinding and they are

1. External centreless grinding 2. Internal centreless grinding

4.4.1 External centreless grinding

Two wheels - a grinding and a regulating wheel are used in external centreless grinding. Both these wheels are rotated in the same direction. The work is placed upon the work rest and rotated between the wheels. The feed movement of the work along its axis past the grinding wheel is obtained by tilting the regulating wheel at a slight angle from the horizontal. An angular adjustment of 0 to 10 degrees is provided in the machine for this purpose. *Fig. 4.5 shows centreless grinding operation.*

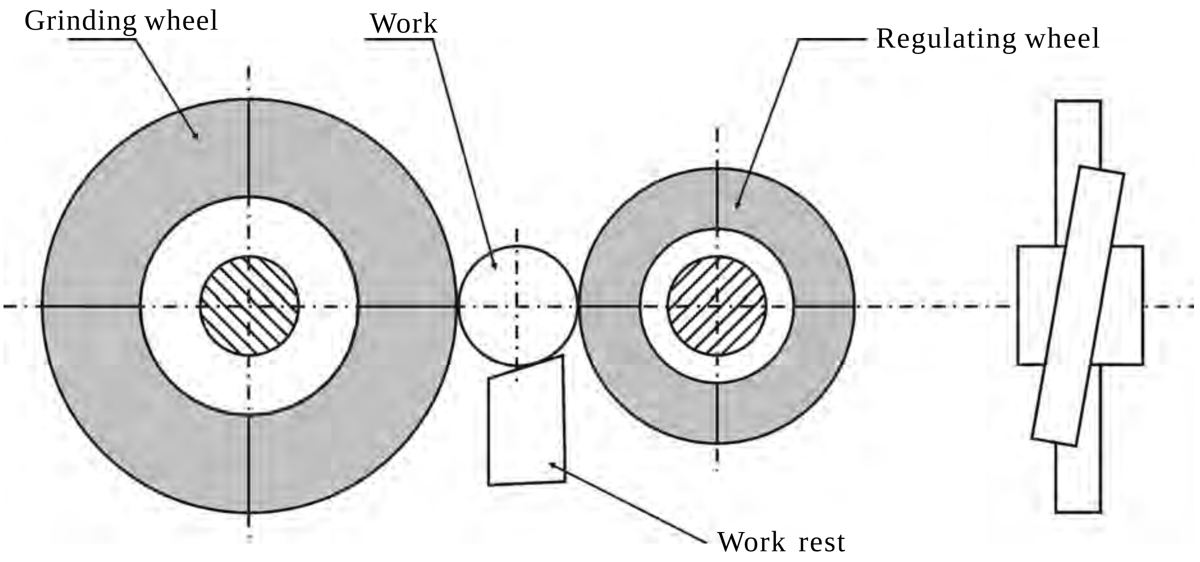

Fig 4.5 Centreless grinding

4.4.2 Internal centreless grinding

The principle of external centreless grinding is applied to internal centreless grinding also. Grinding is done on the inner surfaces of the holes. In internal centreless grinding, the work is supported by three rolls - a regulating roll, a supporting roll and a pressure roll. The grinding wheel contacts the inside surface of the workpiece directly opposite the regulating roll. The distance between the contours of these two wheels is the wall thickness of the work. *Fig. 4.6 shows internal centreless grinding operation.*

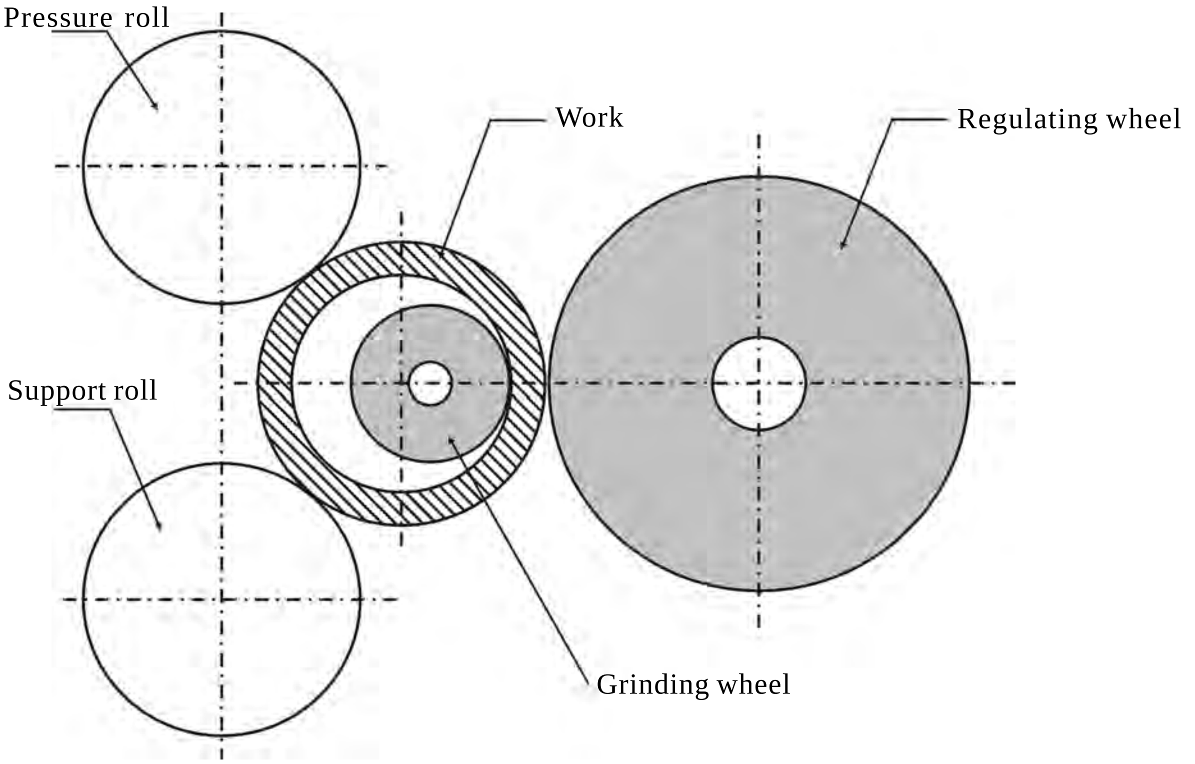

Fig 4.6 Internal centreless grinding

4.4.3 Advantages of centreless grinding

1. As the workpiece is supported throughout the entire length , grinding is done very accurately.
2. Small, slender and fragile workpieces can be ground easily.
3. No chucking or mounting of the work on mandrels & other holding devices are required.
4. As the process is continuous, it is best adapted for production work.
5. The size of the work can easily be controlled.
6. A low order of skill is needed in the operation of the machine.

4.4.4 Diadvantages of centreless grinding

1. In hollow work, there is no certainity that the outer diameter will be concentric with the inside diameter.
2. Works having multiple diameters are not handled easily.

4.5 Grinding machine operations

The process of grinding is the operation of removing excess material from metal parts by a grinding wheel made of hard abrasives. The following operations are generally performed in a grinding machine.

1. Cylindrical grinding
2. Taper grinding
3. Gear grinding
4. Thread grinding

4.5.1 Cylindrical grinding

Cylindrical grinding is performed by mounting and rotating the work between centres in a cylindrical grinding machine. The work is fed longitudinally against the rotating grinding wheel to perform grinding. The upper table of the grinding machine is set at 0° during the operation.

4.5.2 Taper grinding

Taper grinding on long workpieces can be done by swiveling the upper table. If the workpiece is short, the wheelhead may be swiveled to the taper angle. Another method of grinding external taper is to true the face of the grinding wheel by a diamond tool dresser to the required angle. In this case, the table and the wheelhead are not swiveled.

4.5.3 Gear grinding

The teeth of gears are ground accurately on gear grinding machines for their shape. Gear grinding is done by the generating process or by using a form grinding wheel.

The generating process makes use of two saucer shaped grinding wheels. These wheels are used to grind two faces of successive teeth.

The forming process makes use of formed wheels to grind a tooth at a time. This is a very precise method of performing gear grinding.

4.5.4 Thread grinding

Thread grinding machines are used to grind threads accurately. The grinding wheel itself is shaped to the thread profile. These formed grinding wheels have one or multi threads on them.

4.5.5 Wet grinding and dry grinding

Wet grinding

The method of spreading a good quantity of coolant over the work surface and wheel faces during grinding is known as 'wet grinding'. Soda water is used as a coolant. The process of grinding generates high amount of heat generally about 2000°C. Various properties of the work material change due to the heat. In order to reduce the heat generated during grinding, coolant is used. Wet grinding promotes long wheel life and better look of the ground surface. Coolant is pumped from the tank through pipelines.

Dry grinding

Dry grinding is the method of doing grinding operation without applying coolant. Dry grinding produces undesirable effects on work surfaces. It leads to burring & discoloration of work surfaces.The cutting edges of the grinding wheel lose their cutting capacity. So, dry grinding should better be avoided.

4.6 Grinding wheel

A grinding wheel is a multi-tooth cutter made up of many hard particles known as abrasives having sharp edges. The abrasive grains are mixed with a suitable bond, which acts as a matrix to manufacture grinding wheels.

According to construction, grinding wheels are classified under three categories.

1. Solid grinding wheels
2. Segmented grinding wheels
3. Mounted grinding wheels

4.6.1 Abrasives

Abrasives are used for grinding and polishing operations. It should have uniform physical properties of hardness, toughness and resistance to fracture. Abrasive may be classified into two principal groups.

1. Natural abrasives
2. Artificial abrasives

4.6.2 Natural abrasives

The natural abrasives are obtained from the Earth's crust. They include sandstone, emery, corundum and diamond.

Sandstone is used as abrasive to grind softer materials only.

Emery is natural alumuna. It contains aluminium oxide and iron oxide. Corundum is also a natural aluminium oxide. It contains greater percentage of aluminium oxide than emery. Both emery and corundum have a greater hardness and abrasive action than sandstone.

Diamond is the hardest available natural abrasive. It is used in making grinding wheels to grind cemented carbide tools.

4.6.3 Artificial abrasives

Artificial abrasives are of two types.

1. Silicon carbide abrasives
2. Aluminium oxide abrasives

Silicon carbide

Silicon carbide is manufactured from 56 parts of silica, 34 parts of powdered coke, 2 parts of salt and 12 parts of sawdust in a long rectangular electric furnace of the resistance type that is built of loose brick work. There are two types of silicon carbide abrasives - green grit and black grit.

Silicon carbide is next to diamond in the order of hardness. But it is not tough enough as aluminium oxide. It is used for grinding materials of low tensile strength such as cemented carbides, ceramic materials, grey brass, bronze, copper, aluminium, vulcanized rubber etc. This is manufactured under trade names of carborundum. It is denoted by the letter 'S'.

Aluminium oxide

Aluminium oxide is manufactured by heating mineral bauxite, silica, iron oxide, titanium oxide, etc., mixed with ground coke and iron borings in arc type electric furnace.

Aluminium oxide is tough and not easily fractured, so it is better adapted to grinding materials of high tensile strength such as most steels, carbon steels, high speed steels, and tough bronzes. This is denoted by the letter 'A'.

4.6.4 Types of bonds

A bond is an adhesive substance that is employed to hold abrasive grains together in the form of grinding wheels. There are several types of bonds. Different grinding wheels are manufactured by mixing hard abrasives with suitable bonds. The table containing the types of wheels manufatured using dufferet types of bonds and their symbols is given below

Type of bond	Symbol	Grinding wheel
1. Vitrified	V	Vitrified wheel
2. Silicate	S	Silicate wheel
3. Shellac	E	Elastic wheel
4. Resinoid	B	Resinoid wheel
5. Rubber	R	Vulcanised wheel
6. Oxychloride	O	Oxychloride wheel

4.6.5 Grain size, Grade and Structure

Grain size (Grit)

The grinding wheel is made up of thousands of abrasive grains. The grain size or grit number indicates the size of the abrasive grains used in making a wheel, or the size of the cutting teeth. Grain size is denoted by a number indicating the number of meshes per linear inch of the screen through which the grains pass when they are graded. There are four different groups of the grain size namely coarse, medium, fine and very fine. If the grit number is large, the size of the abrasive is fine and a small grit number indicates a large grain of abrasive.

Coarse	:	10, 12, 14, 16, 20, 24
Medium	:	30, 36, 46, 54, 60
Fine	:	80, 100, 120, 150, 180
Very fine	:	220, 240, 280, 320, 400, 500, 600

Grade

The grade of a grinding wheel refers to the hardness with which the wheel holds the abrasive grains in place. It does not refer to the hardness of the abrasive grains. The grade is indicated by a letter of the English alphabet. The term 'soft' or 'hard' refers to the resistance a bond offers to disruption of the abrasives. A wheel from which the abrasive grains can easily be dislodged is called soft whereas the one, which holds the grains more securely, is called hard. The grade of the bond can be classified in three categories.

Soft	:	A	B	C	D	E	F	G	H		
Medium	:	I	J	K	L	M	N	O	P		
Hard	:	Q	R	S	T	U	V	W	X	Y	Z

Sturcture

The relative spacing occupied by the abrasives and the bond is referred to as structure. It is denoted by the number and size of void spaces between grains. It may be 'dense' or 'open'. Open structured wheels are used to grind soft and ductile materials. Dense wheels are useful in grinding brittle materials.

Dense	:	1	2	3	4	5	6	7	8
Open	:	9	10	11	12	13	14	15	or higher

4.6.6 Standard marking system of grinding wheels

The Indian standard marking system for grinding wheels has been prepared with a view of establishing a uniform system of marking of grinding wheels to designate their various characteristics.

Prefix	Manufacturer's abrasive type symbol
First element (letter)	Type of abrasive
Second element (number)	Size of abrasive
Third element (letter)	Grade of bond
Fourth element (number)	Structure of the grinding wheel
Fifth element (letter)	Type of bond
Suffix	Manufacturer's symbol

The meaning of the given marking on a grinding wheel

w	A	54	M	7	V	20

w	-	Manufacturer's abrasive type symbol	
A	-	Type of abrasive	- Aluminium oxide
54	-	Size of abrasive	- Medium
M	-	Grade of bond	- Medium
7	-	Structure of the grinding wheel	- Dense
V	-	Type of bond	- Vitrified
20	-	Manufacturer's symbol	

4.6.7 Mounting of a grinding wheel

Great care must be taken in mounting the grinding wheels on the spindle because of high cutting speeds. The following points are important in connection with mounting of grinding wheel. *Fig. 4.7 shows mounting of a grinding wheel.*

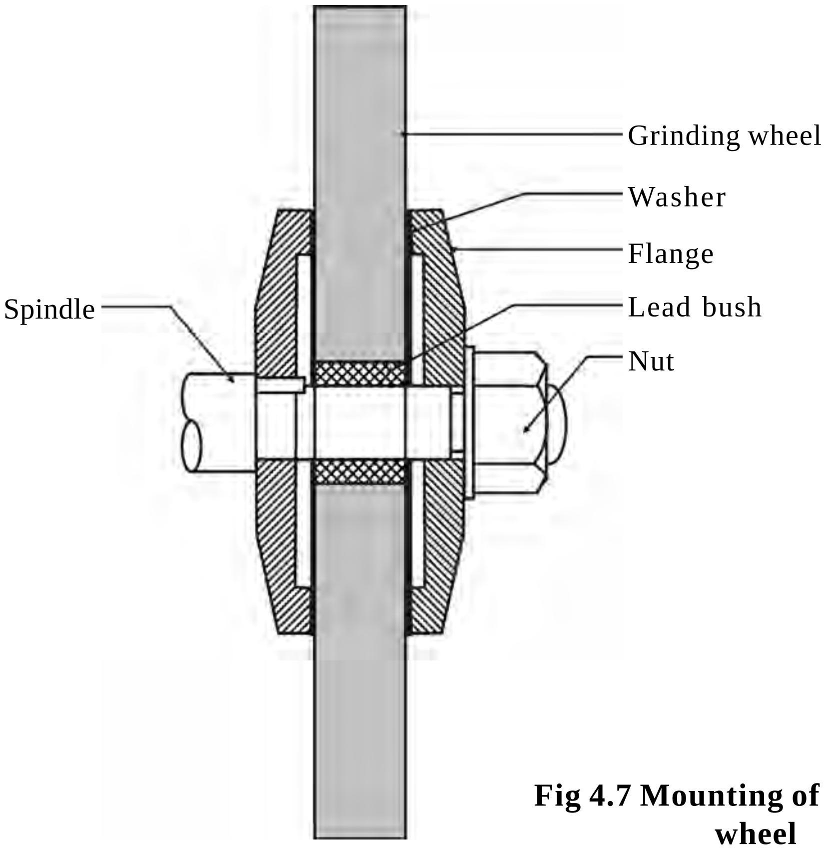

Fig 4.7 Mounting of a grinding wheel

1. All wheels should be inspected before mounting to make sure that they have not been damaged. The wheel is put on an arbor and is subjected to slight hammer blows. A clear, ringing, vibrating sound must be heard.

2. The wheel should not be forced on and they should have an easy fit on the spindle.

3. The hole of grinding wheel is mostly lined with lead. The lead liner bushes should not project beyond the side of wheels.

4. There must be a flange on each side of the wheel. The flange must be large enough to hold the wheel properly, at least the flange diameter must be equal to the half of the grinding wheel diameter. Both the flanges should be of same diameter.

5. The sides of the wheel and the flanges should be flat. Flanges contact the wheel only with the annular clamping area.

6. Washers of compressible materials such as cardboard, leather, rubber etc., not over 1.5 mm thick should be fitted between the wheel and its flanges. The diameter of washers may be normally equal to the diameter of the flanges.

7. The inner flange should be keyed to the spindle, whereas the outer flange should have an easy sliding fit on the spindle so that it can adjust itself tightly to give a uniform bearing on the wheel and the compressible washers.

8. The nut should be tightened to hold the wheel firmly. Undue tightness is unnecessary and undesirable as excessive clamping strain is liable to damage the wheel.

9. The wheel guard should be placed and tightened before the machine is started.

10. After mounting the wheel, the machine is started. The grinding wheel should be allowed to idle for a period of about 10 to 15 minutes. Grinding wheels must be dressed and trued before any work can be started.

4.6.8 Glazing, Loading and Chattering

Glazing

It is the condition of the grinding wheel in which the cutting edges or the face of the wheel takes a glass-like appearance. Glazing takes place if the wheel is rotated at very high speeds and is made with harder bonds. Rotating the wheel at lesser speeds and using soft bonds are the remedies. The glazed wheels are dressed to have fresh, sharp cutting edges.

Loading

The wheel is loaded if the particles of the metal being ground adhere to the wheel. The openings or pores of the wheel face are filled up with the metal. It is caused by grinding a softer material or by using a very hard bonded wheels and running it very slowly. It may also take place if very deep cuts are taken by not using the right type of coolant.

Chattering

The wavy pattern of crisscross lines are visible on the ground surface some times. This condition is known as chattering. It takes place when the spindle bearings are not fitted correctly and because of the imbalance of the grinding wheel.

4.6.9 Dressing and truing of grinding wheels

Dressing

If the grinding wheels are loaded or gone out of shape, they can be corrected by dressing or truing of the wheels. Dressing is the process of breaking away the glazed surface so that sharp particles are again presented to the work. The common types of wheel dressers known as "Star" -dressers or diamond tool dressers are used for this purpose.

A star dresser consists of a number of hardened steel wheels on its periphery. The dresser is held against the face of the revolving wheel and moved across the face to dress the wheel surface. This type of dresser is used particularly for coarse and rough grinding wheels. *Fig. 4.8 shows dressing by a star wheel dresser*.

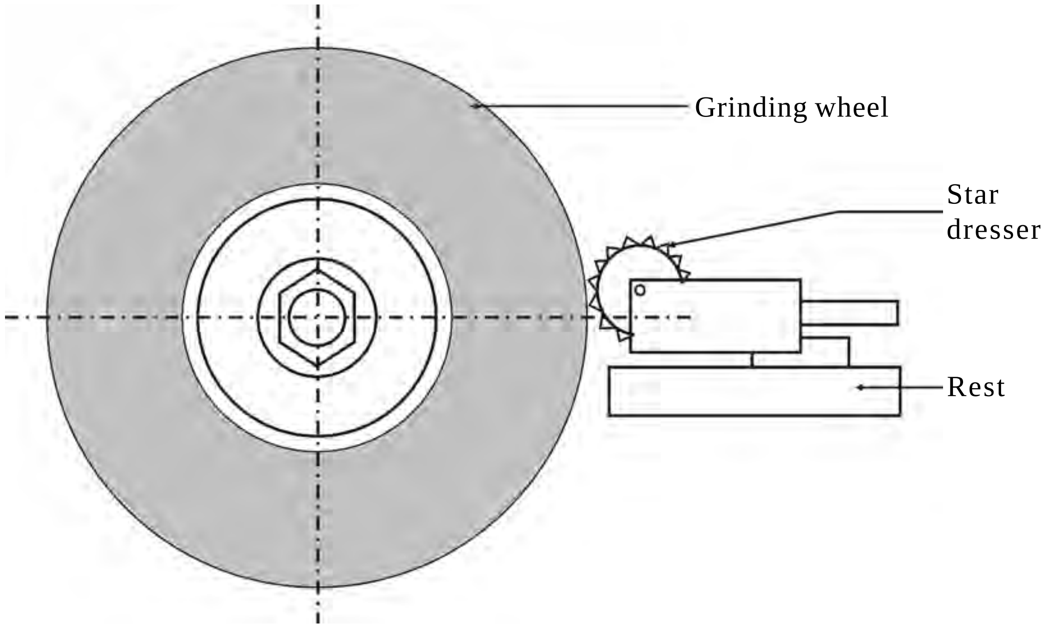

Fig 4.8 Dressing of a grinding wheel (Star wheel method)

For precision and high finish grinding, small industrial diamonds known as 'bort' are used. The diamonds are mounted in a holder. The diamond should be kept pointed down at an angle of 15° and a good amount of coolant is applied while dressing. Very light cuts only may be taken with diamond tools.

Fig. 4.9 shows dressing by a diamond tool dresser.

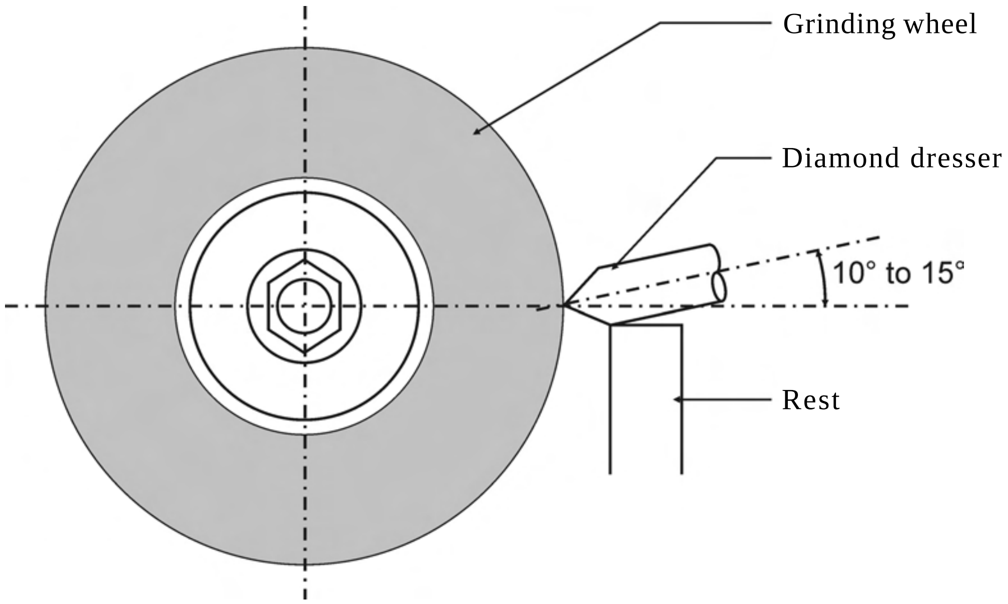

Fig 4.9 Dressing of a grinding wheel (Diamond dresser method)

Truing

The grinding wheel becomes worn from its original shape because of breaking away of the abrasive and bond. Sometimes the shape of the wheel is required to be changed for form grinding. For these purposes the shape of the wheel is corrected by means of diamond tool dressers. This is done to make the wheel true and concentric with the bore or to change the face contour of the wheel. This is known as truing of grinding wheels.

Diamond tool dreesers are set on the wheels at 15° and moved across with a feed rate of less than 0.02mm. A good amount of coolant is applied during truing.

4.6.10 Balancing of grinding wheels

Grinding wheels rotate at high speeds. The density and weight should be evenly distributed throughout the body of the wheel. If it is not so, the wheel will not rotate with correct balance.

The grinding wheels are balanced by mounting them on test mandrels. The wheel along with the mandrel is rolled on knife edges to test the balance and corrected.

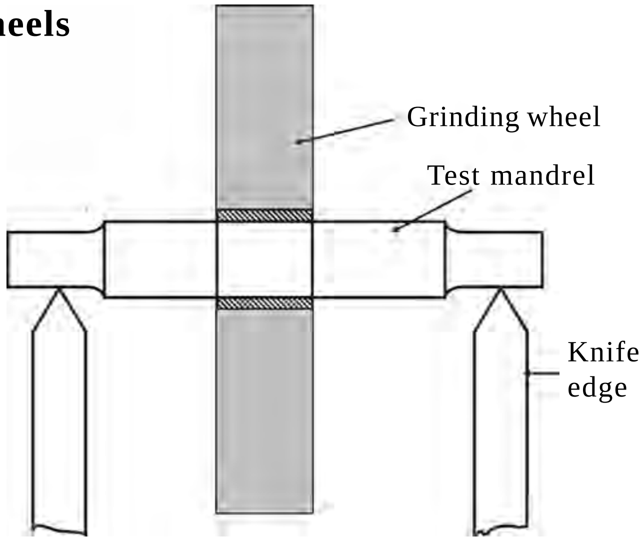

Fig 4.10 Balancing of a grinding wheel

4.7 Cutting speed, feed and depth of cut

4.7.1 Cutting speed

Cutting speed of a grinding process is the relative speed of the grinding wheel and the workpiece. It is expressed in m/sec.

The cutting speed of the wheel is expressed as

$$\text{Cutting speed(C.S)} = \frac{\pi dn}{1000} \text{ m per sec}$$

Where:

'd'- the diameter of the grinding wheel in mm, and

'n'- the speed of the grinding wheel in r.p.s.

4.7.2 Feed

Feed in a grinding process is the longitudinal movement of the work mounted on the table per revolution of the grinding wheel. It is expressed in mm per revolution.

The longitudinal feed during rough grinding is approximately 0.6 to 0.9 of the width of the wheel and 0.4 to 0.6 of the width of the wheel during finish grinding.

4.7.3 Depth of cut

The thickness of the metal layer removed from the work in one pass of the wheel is known as depth of cut. It is expressed in mm. Depth of cut is kept ranging from 0.005 to 0.04mm.

4.8 Surface finishing processes

In a workshop, metal parts are manufactured by performing different operations in lathe, shaping machine, milling machine, drilling machine or grinding machine. In order to enhance the quality of surfaces of these parts, several surface finishing processes are performed on them. If better finish is desired for looks, for accuracy, for wearing qualities or for better fits, one of the following processes is employed.

1. Lapping 2. Honing 3. Superfinishing
4. Polishing 5. Buffing 6. Scraping
7. Electroplating

4.8.1 Lapping

Lapping is the abrading process that is used to produce geometrically true surfaces, correct minor surface imperfections, improve dimensional accuracy to provide a very close fit between two surfaces in contact. Very thin layers of metal (0.005 to 0.01 mm) are removed in lapping. Machining can be done to the accuracy of less than 1micron.

To perform lapping operation, lapping shoes and lapping mixture are needed. Laps may be made of almost any material soft enough to receive and retain the abrasive grains. They are made of soft cast iron, brass, copper or lead. It is made in different shapes. Abrasive powders such as emery, corundum, iron oxide and chromium oxide are mixed with oil or grease to make lapping mixture.

The face of the lap becomes charged with abrasive particles. Laps may be operated by hands or by machine. Cylindrical work may be lapped by rotating the work in a lathe and reciprocating the lap over the work. Flat surfaces may be lapped by holding the work against a rotating disc. Special lapping machines like vertical lapping machine, centreless lapping machine and abrasive belt lapping machines are also widely used.

4.8.2 Honing

Honing is the abrading process done mostly for finishing round holed produced by drilling, reaming or boring by means of bonded abrasive stones called 'hones'. Honing is a machining process and is used to remove metal upto 0.25 mm. The surface roughness value can be maintained between 0.025 and 0.4 microns. So honing is used to correct some out of roundness, tapers, tool marks and axial distortion.

Fig. 4.11 illustrates a honing toolhead.

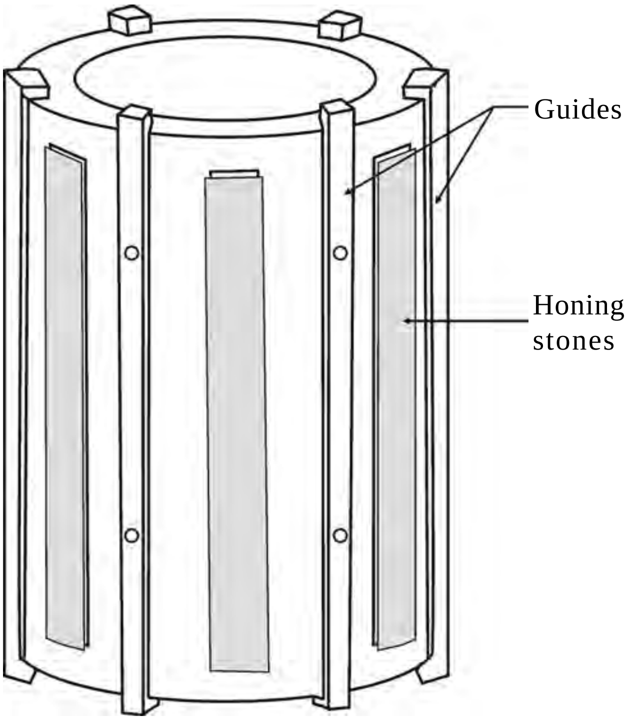

Fig 4.11 Honing

Honing stones are used for performing honing. Honing toolhead fitted with honing stones is fitted on spindles and rotated. The parts having holes to be honed are mounted on vises or suitable fixtures. The spindle is moved vertically to abrade the walls of the holes. A good quantity of coolant should be applied while honing.

Honing can be done on materials like plastic, silver, brass, aluminium, cast iron, steel and cemented carbide. Journal bearings supporting the crank shafts and long holes found in the barrels of guns are generally honed. The honing machines are of two types - Vertical & Horizontal.

4.8.3 Superfinishing

The process of superfinishing is an operation intended to produce an extremely high quality of surface finish. The surface roughness value can be maintained between 0.015 and 0.32 microns. A very thin layer of metal (0.005 mm to 0.02 mm) is removed by using very fine size of abrasives (Size of 400 to 600)in superfinishing. It can be done on both external and internal surfaces.

The grinding stones are made to reciprocate and the workpiece is made to rotate or reciprocate. A fine surface is obtained by admitting coolant mixed with kerosene. Using some special machines, superfinishing is performed on crankshaft, journal bearings and cam shafts.

4.8.4 Polishing

Polishing is a surface finishing operation performed by a polishing wheel for the purpose of removing metal to take out scratches, tool marks and other defects from rough surfaces. Polishing is performed only to provide better looks. Polishing wheels are made of leather, paper, canvas, felt or wool. The abrasive grains are setup sometimes on the faces of the wheel and work is held against it and rotated to give the desired finish.

4.8.5 Buffing

Buffing is used to give a much higher, reflective finish that cannot be obtained by polishing. Buffing wheels are made of felt, leather and pressed & glued layers of a variety of cloth. The abrasive used are iron oxide, chromium oixde, emery, etc. The abrasive is mixed with a binder. The binder is a paste consisting of wax mixed with grease, paraffin and turpentire. It is applied either on the buffing wheel or on the work. Buffing wheels are rotated against the work to get a superior finish.

4.8.6 Scraping

There will always be some minor imperfections on the machined surfaces. They are removed by an hand tool called scraper. There are three types of scrapers - flat, half-round and triangular. The part to be scraped is fitted in a vise and a thin layer of Persian blue is applied on the surface. A suitable scraper is selected and circular movements are made on the surface with it. Thin flakes of metal are removed. Persian blue is once again applied to check the flatness.

4.8.7 Electroplating

Electroplating is the process of applying metallic coatings on the surfaces of metal parts. It can be done on parts of non-metals also.

This is done for protection against corrosion or against wear and tear and for better appearance. It is also done to slightly increase the size of worn out parts and to make parts easy to solder. It may also be used to keep off selected areas on steel parts from being carburized during heat treatment.

Common plating materials are chromium, nickel, copper, zinc, cadmium, etc. The more precious metals like silver, gold, platinum, and radium are also applied for plating. Door handles and automobile parts are chromium plated for appearance. The method of plating a layer of zinc is known as galvanising.

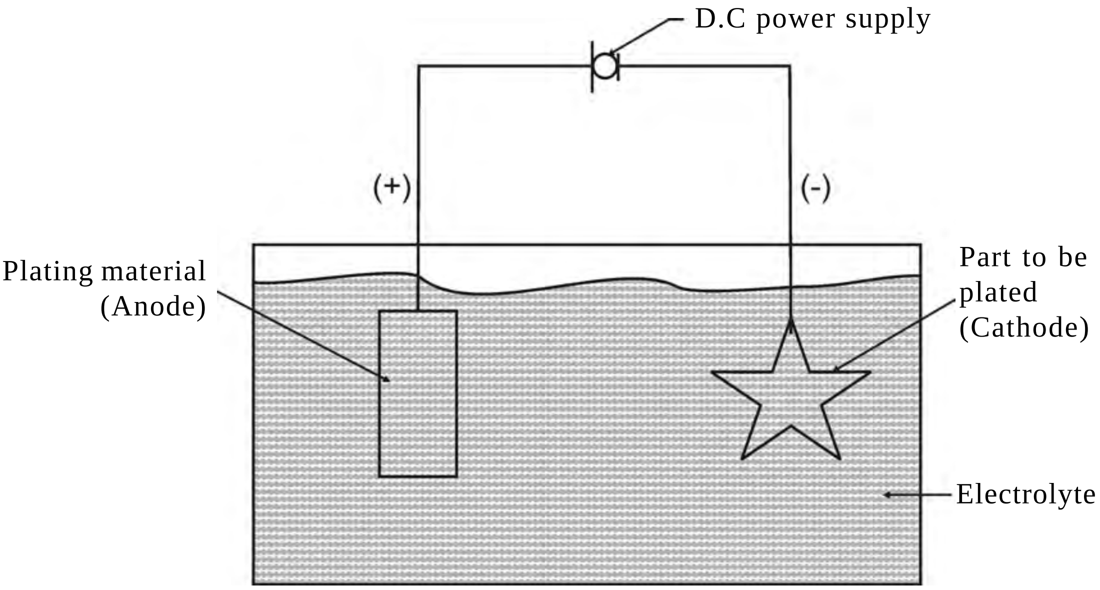

Fig 4.12 Electroplating

Surfaces to be plated must be buffed smooth to eliminate scratches. The surface is cleaned by suitable cleaning solutions to remove all grease and dirt.

The four essential elements of plating process are the part to be plated (cathode), plating material (anode), electrolyte and direct current. The current leaves anode which is a bar of plating metal and migrates through the electrolyte to the cathode which is the part to be plated.

Fig 4.12 shows the method of electroplating.

4.9 Safety precautions

1. We should ensure that the work is held firmly and properly. The grinding wheel should be inspected and mounted on the spindle.

2. Proper work speed, wheel speed and table feed should be selected according to the nature of the work.

3. Safety goggles should be worn by the operator.

4. It should be checked whether the safety guards are fitted.

5. The operator should not touch the rotaing work or the grinding wheel.

6. The operator should not wear loose shirts and neck tie.

7. The work rest of a bench grinder should be placed close to the grinding wheel.

8. The speed of the vitrified grinding wheels should not exceed 2800 meters per minute.

9. When new wheels are used, the wheel speed should be kept minimum.

10. If the job is held in a magnetic chuck, extra grips should be placed around the workpieces.

QUESTIONS

I.A. Choose the correct option

1. The accuracy obtained by precision grinding is
   a. 0.000025mm b. 0.0025mm
   c. 0.00125mm d. 0.00625mm

2. The cutting tool with several thousands of cutting edges is
   a. lathe cutting tool b. drill
   c. grinding wheel d. milling cutter

3. The heat generated during dry grinding will be
   a. 2000° C b.20° C c. 1000° C d. 1200° C

4. Bond used for making elastic grinding wheel is
   a. vitrified b. silicate c. shellac d. resinoid

5. The grip with which the bond holds the abrasives is known as
   a. grain size b. grade of the grinding wheel
   c. structure of the grinding wheel d. type of abrasive

I.B. Answer the following questions in one or two words

1. Name one artificial abrasive.
2. Name the grinding machine used for grinding jigs, fixtures and tools.
3. What is the name of the bond indicated by the letter ‘V’?

II. Answer the following questions in one or two sentences

1. What is grinding?
2. Name any four grinding machines.
3. What is centreless grinding?
4. What are the four types of surface grinders?
5. List any four operations performed in a grinding machine.
6. What are the effects of dry grinding?
7. Name any four types of bonds.
8. What is glazing?
9. What is loading?
10. What are the reasons for chattering?

III. Answer the following questions in about a page

1. List the types of rough and precision grinding machines.
2. Explain external centreless grinding with a diagram.
3. A grinding wheel is specified as follows w A 46 K 5 V 17. Explain the meaning of each symbol.
4. Explain 'Dressing' of a grinding wheel with a diagram.
5. Explain 'Truing' of a grinding wheel
6. Write short notes on

   a. Lapping b. Honing

IV. Answer the following questions in detail

1. Draw and explain a external cylindrical grinder.
2. Explain a surface grinder with a diagram.
3. Explain 'mounting' of a grinding wheel with a suitable diagram.
4. Write notes on

   a. Precision grinding b. Polishing c. Buffing d. Scraping

5. MILLING MACHINE

5.1 Introduction

Milling is a process of removing metal by feeding the work against a rotating multipoint cutter. The machine tool intended for this purpose is known as milling machine.

It is found in shops where tools and cutters are manufactured. The surface obtained by this machine tool is superior in quality and more accurate and precise.

Eli Whitney designed a complete milling machine in 1818. In the year 1861 Joseph Brown, a member of Brown and Sharp company developed the first universal milling machine.

5.2 Advantages and disadvantages of a milling machine

5.2.1 Advantages

1. The metal is removed at a faster rate as the cutter has got multiple cutting edges and rotates at a higher speed.

2. It is possible to perform machining by mounting more than one cutter at a time.

3. The table of the machine can be moved to an accuracy of 0.02mm.

4. It is very useful since various cutters and precise tools can be machined.

5. Special attachments can be mounted on the machine to perform operations that are performed in other machine tools.

6. The quality of the shop is enhanced with the presence of this machine.

5.2.2 Disadvantages

1. The cost of the milling machine is high.

2. As milling cutters cost high, the investment for procuring tools is more.

3. The production cost will increase if we carry out the operations performed in a shaper or a drilling machine with a milling machine.

5.3 Column and knee type milling machine

Base

It is made of cast iron and supports all the other parts of the machine tool. A vertical column is mounted upon the base. In some machines, the base serves as a reservoir for cutting fluid.

Column

It is mounted upon the base and is box shaped. It houses the mechanism for providing drive for the spindle. The front vertical face of the column is machined accurately to form dovetail guideways for the knee to move up and down. The top of the column holds an overhanging arm.

Knee

It slides up and down on the guideways of the column. An elevating screw mounted on the base obtains this movement. Saddle is mounted upon the knee and moves in a cross direction.

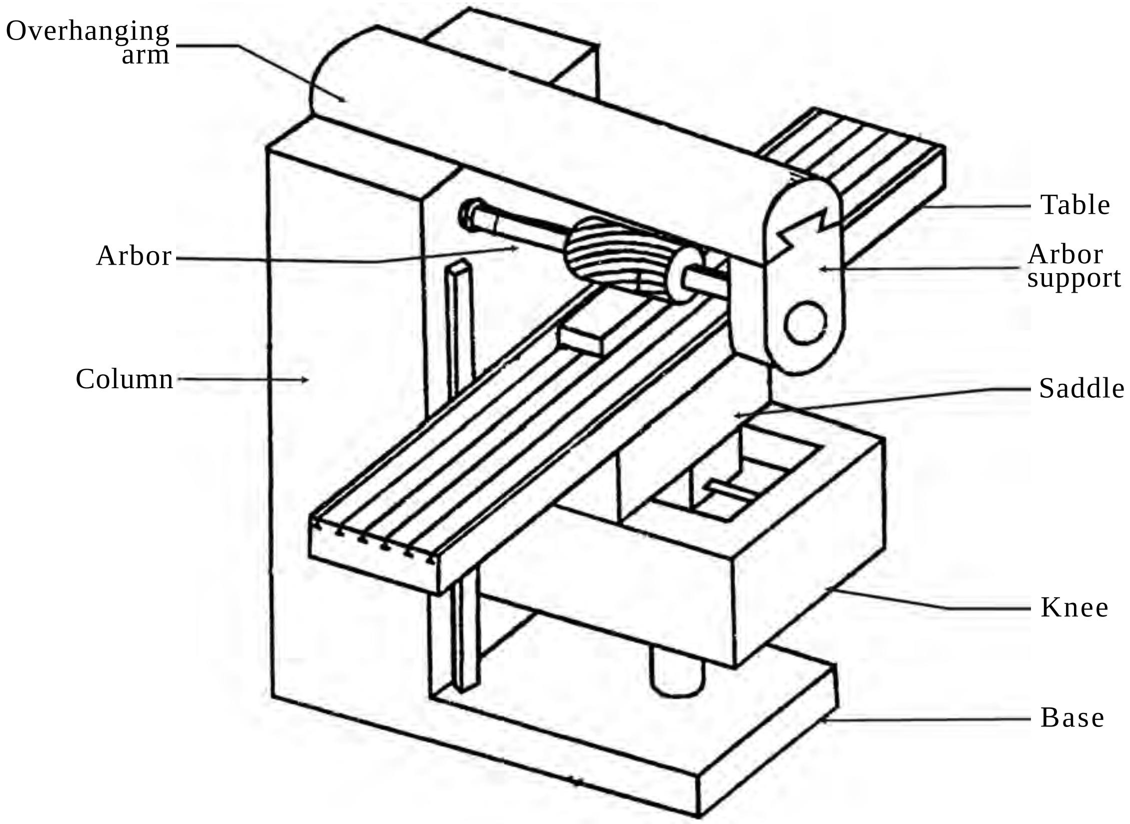

Fig 5.1 Horizontal milling machine (Pictorial view)

Saddle

It is mounted on the guideways of the knee and moves towards or away from the face of the column. This movement can be obtained either by power or by hand. The top of the saddle has guideways for the table movement.

Table

The table is moved longitudinally either by power or manually on the guideways of the saddle. The trip dogs placed on it control the movement of the table. The table of a universal milling machine can be swiveled horizontally to perform helical works. The top surface of the table has got 'T' – slots on which the workpieces or other work holding devices are mounted.

Spindle

It is located in the upper part of the column. It receives power from the motor through belt, gears and clutches. The front end of the spindle has got a taper hole into which the cutters are held with different cutter holding devices.

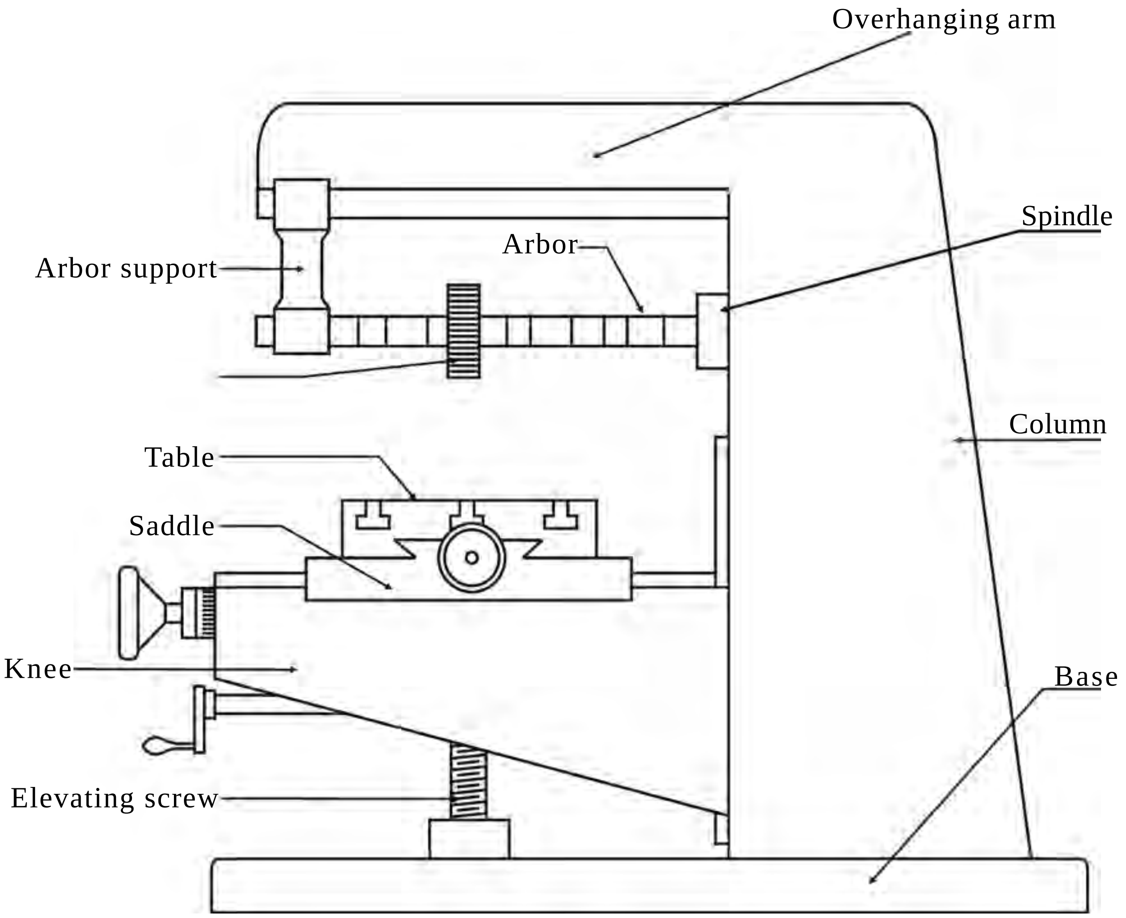

Fig 5.2 Horizontal milling machine

Overhanging arm

It supports the arbor from the top of the column. The arbor is supported by the bearing fitted within the arbor support. It is also useful while using some special attachments.

Front brace

It is an extra support fitted between the knee and the overhanging arm. It is slotted to allow the knee to be adjusted vertically.

Arbor

It supports the different types of cutters used in the machine. It is drawn into the taper hole of the spindle by a drawbolt. One or more cutters are mounted on the arbor by placing spacing collars between them. The arbor is supported by an arbor support. The arbor is provided with a Morse taper or self-releasing taper.

A column and knee type milling machine is illustrated in Fig. 5.1 & 5.2

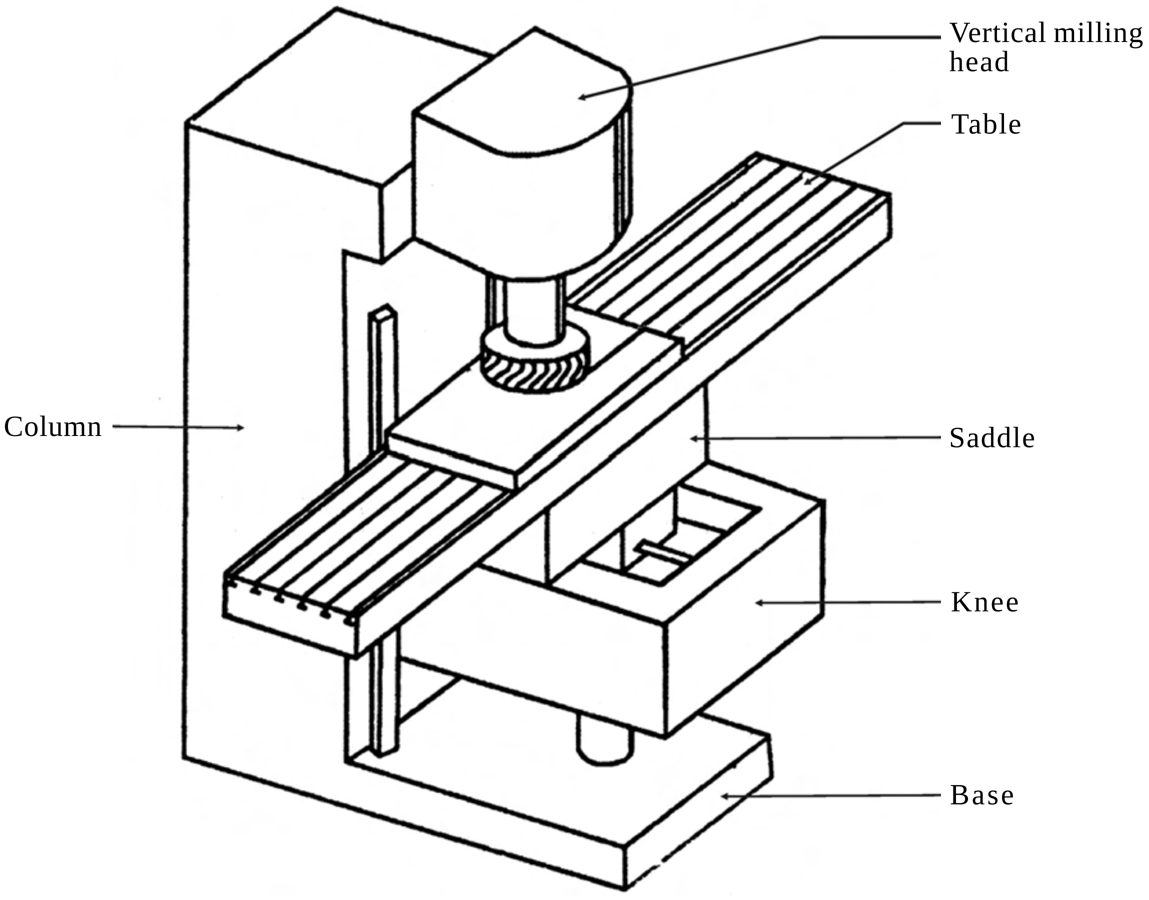

Fig 5.3 Vertical milling machine (Pictorial view)

5.3.1 Vertical milling machine

It is very similar to a horizontal milling machine in construction as it has the same parts of base, column, knee, saddle and table. The spindle of the machine is positioned vertically. The cutters are mounted on the spindle. The spindle is rotated by the power obtained from the mechanism placed inside the column. Angular surfaces are machined by swiveling the spindle head.

A vertical milling machine is illustrated in Fig. 5.3 & 5.4

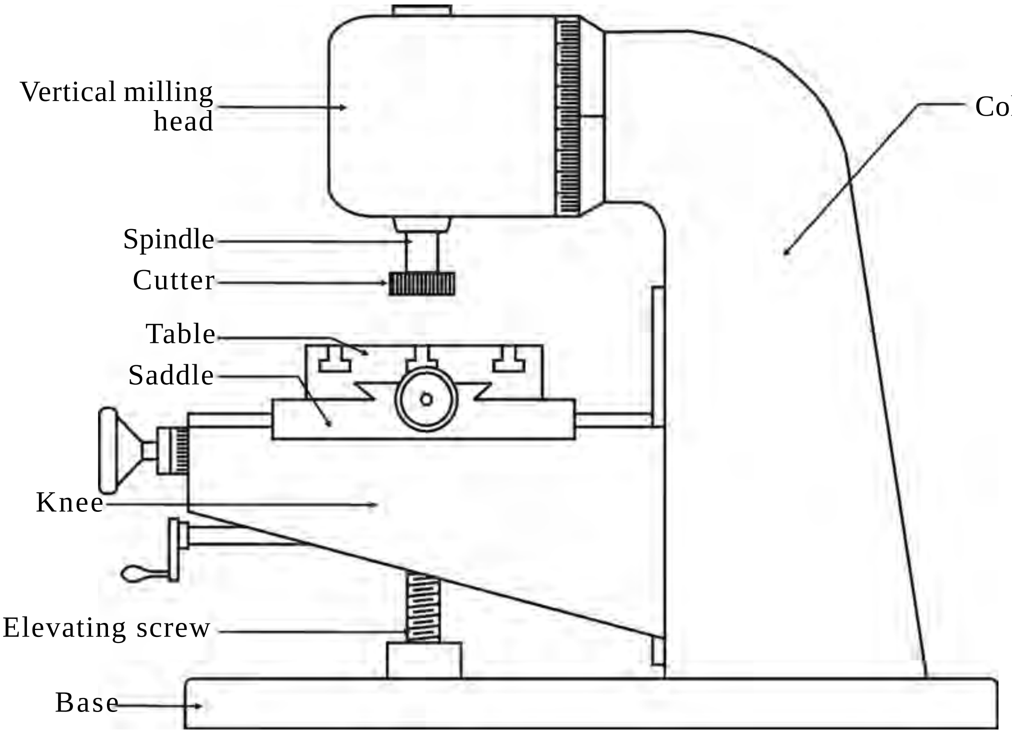

Fig 5.4 Vertical milling machine

5.4 Types of milling machine

The milling machines are classified according to the general design of the machine.

1. Column and knee type
   - a) Plain milling machine
   - b) Universal milling machine
   - c) Omniversal milling machine
   - d) Vertical milling machine
2. Table type milling machine
3. Planer type milling machine
4. Special type milling machine

5.4.1 Column and knee type milling machine

The column of a column and knee type milling machine is mounted vertically upon the base. Knee is mounted on the accurately machined guideways of the column. It is designed to move up and down accurately. Saddle and table are mounted on the knee.

There are different types of column and knee type machines.

a) Plain milling machine

It is rigid and sturdy. Heavy workpieces are mounted and machined on the machine. The work mounted on the table is moved vertically, longitudinally and crosswise against the rotating cutter. The table cannot be rotated. It is also called as horizontal milling machine because the cutter rotates in horizontal plane.

b) Universal milling machine

The table of a universal milling machine can be swiveled by 45° on either side and so helical milling works can be performed. It is named so because it can be adapted for a very vide range of milling operations.

Various milling attachments like index head, vertical milling head, slot milling head and rotary table can be mounted. It can machine drills, reamers, gears, milling cutters with a very high degree of accuracy and so it finds an important place in a workshop.

c) Omniversal milling machine

In addition to the table movements obtained in a universal milling machine, the knee can be tilted to a required angle. It is useful for machining helical grooves, reamer and bevel gears. It is mostly used in tool room work.

d) Vertical milling machine

A spindle of a vertical milling machine is positioned at right angles to the table. The cutter is moved vertically or at an angle by swiveling the vertical head of the machine.

The machine is adapted for machining slots and flat surfaces by moving the table. By mounting end mills and face milling cutters on the spindle, vertical milling and internal milling are preformed.

5.4.2 Differences between a plain milling machine and a universal milling machine

Plain milling machine	Universal milling machine
1. The table can be moved vertically, longitudinally and crosswise.	1. Apart from the three movements of a plain milling machine, it can be swiveled about 45°.
2. Helical milling works cannot be done as the tablecannot be swiveled.	2. The table can be swiveled and helical milling and spiral milling can be performed.
3. As there are no special attachments, operations like gear cutting, slotting and vertical milling cannot be performed.	3. Special attachments like indexing head, rotary table, vertical milling attachment, slotting head are available with this machine. So spur gear, helical gear, bevel gear, cutters and reamers can be machined.
4. It is more rigid and suitable for machining on heavy and large workpieces and for simple milling operations.	4. It is meant for light workpieces. A vide range of operations can be performed in this machine. It is mainly used in tool rooms.
5. The cost is less.	5. It is very costly.

5.5 Size of a milling machine

The size of a milling machine is specified as follows

1. The size of the table (length and width)
2. The maximum lengths of longitudinal, cross and vertical travel of the table.
3. Number of spindle speeds, number of feeds
4. Spindle nose taper
5. Power required
6. Nett weight of the machine
7. The floor space required
8. Type of the machine

5.6 Fundamental milling processes

The various milling processes may be grouped under two headings:

1. Peripheral milling   2. Face milling

5.6.1 Peripheral milling

The machining is performed by the cutting edges on the periphery of the milling cutter. It is classified under two headings

1. Up milling   2. Down milling

Up milling

In this method, the workpiece mounted on the table is fed against the direction of rotation of the milling cutter. The cutting force is minimum during the beginning of the cut and maximum at the end of cut. The thickness of chip is more at the end of the cut. As the cutting force is directed upwards, it tends to lift the workpiece from the fixtures. A difficulty is felt in pouring coolant on the cutting edge. Due to these reasons the quality of the surface obtained by this method is wavy. This processes being safer is commonly used and sometimes called conventional milling.

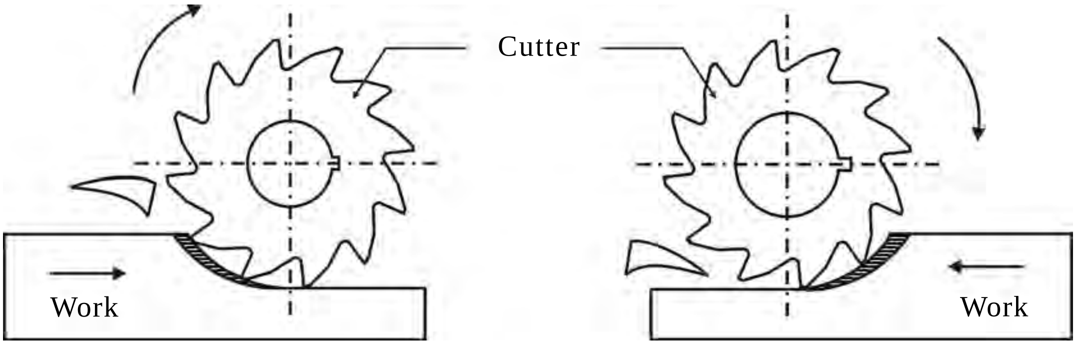

Upmilling   **Downmilling**

Fig 5.5 Upmilling and down milling

Down milling

The workpiece mounted on the table is moved in the same direction as that of the rotation of the milling cutter. The cutting force is maximum at the beginning and minimum at the end of cut. The chip thickness is more at the beginning of the cut. The workpiece is not disturbed because of the bite of the cutter on the work. The coolant directly reaches to the cutting point. So the quality of surface finish obtained is high. Because of the backlash error between the feed screw of the table and the nut, vibration is setup on the workpiece. *Fig. 5.5 illustrates up milling & down milling.*

5.6.2 Face milling and end milling

During face milling, the machining is performed by the peripheral cutting edges. The surface obtained by the processes is perpendicular to the axis of rotation of the cutter.

End milling is a process of the machining by milling cutters which have cutting edges both on the end face and on the periphery.

5.7 Work holding devices

For effective machining operations, the workpieces need to be properly and securely held on the machine table. The following are the usual methods of holding work on the table.

Large and irregular shaped workpieces are held on the milling machine table by 'T' – bolts and clamps.

'V' – blocks are used for holding cylindrical workpieces on the machine table in which keyways, slots and flats are to the machined. Angle plates are used to support the work when surfaces are to be milled at right angles to another machined surface.

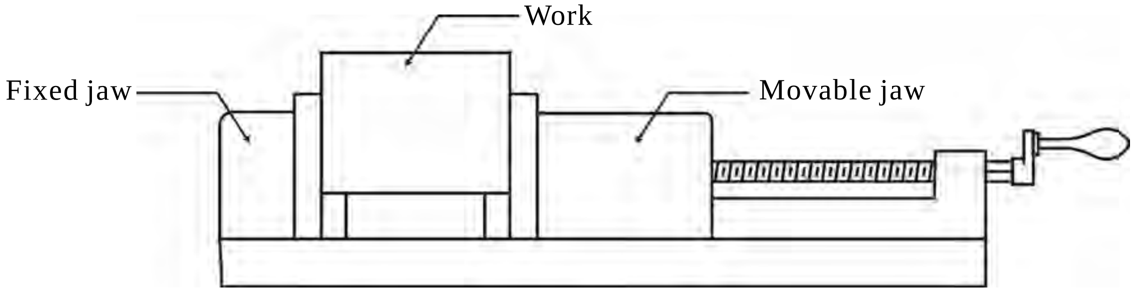

Fig 5.6 Plain vise

Vises are commonly used for holding work on the table due to its quick loading and unloading arrangement. There are mainly three types of vises namely plain vise, swivel vise and universal vise. *Different types of vises are shown in Fig. 5.6, 5.7 & 5.8.*

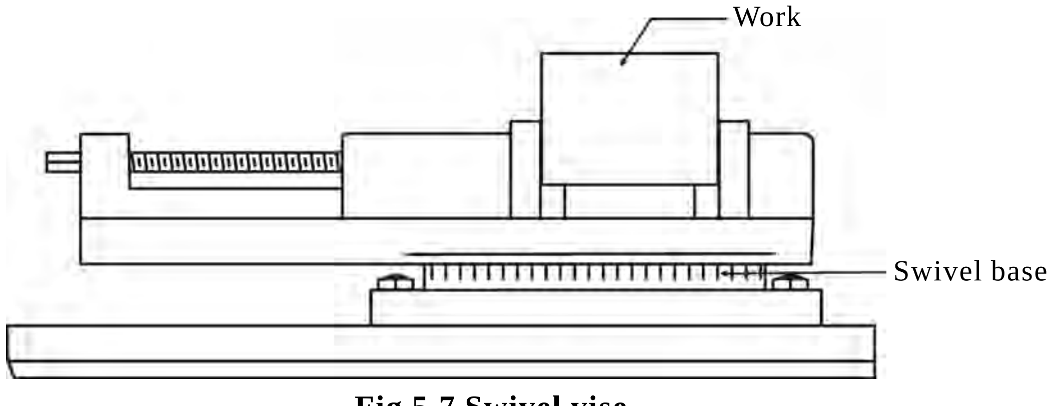

Fig 5.7 Swivel vise

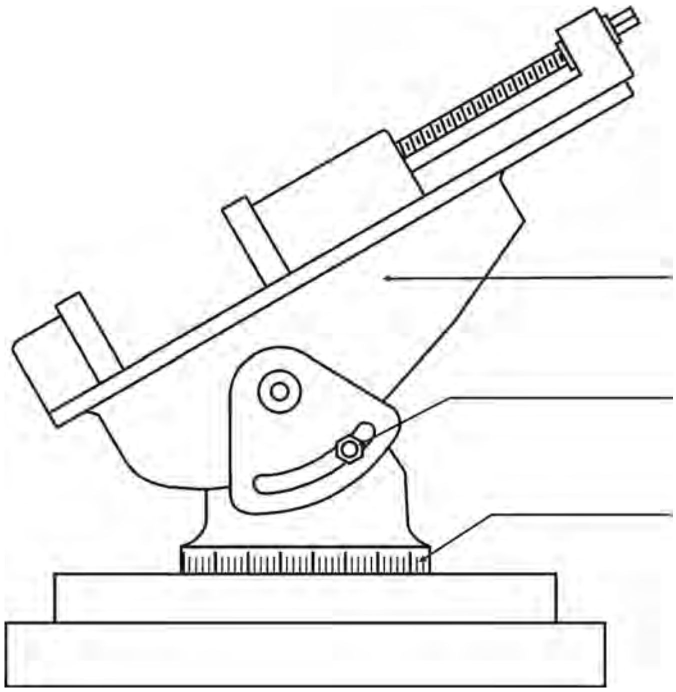

Fig 5.8 Universal vise

Milling fixtures are useful when large numbers of identical workpieces are to be machined. Workpieces are held easily, quickly and accurately by milling fixtures.

5.8 Cutter holding devices

Depending on the design of the cutter, there are several methods of supporting milling cutters on the machine spindle.

1) Arbor 2) Collet

3) Adapter 4) Screwed on cutters

5.8.1 Arbor

Milling cutters with central holes are mounted and keyed on a shaft called arbor. There are three different types of arbor namely Pilot end arbor, 'A' type arbor and stub arbor.

The arbors are made with taper shanks for correct alignment with the machine spindle. The left side of the arbor is threaded internally to receive a drawbolt. This drawbolt connects the arbor with the spindle. A long key way is cut on the entire length of the arbor. Cutters are mounted at desired positions on the arbor by placing spacing collars between them. The spindle rotation is transmitted to the arbor and the cutter is rotated.

An arbor is illustrated in Fig. 5.9

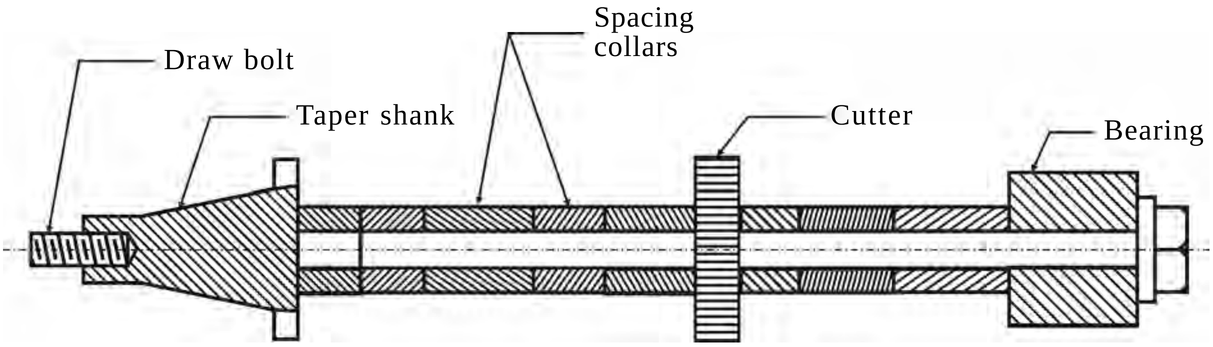

Fig 5.9 Arbor

5.8.2 Collet

It is a form of sleeve bushing used to hold arbors or cutters having a smaller shank than the spindle taper. Collets are connected to the spindle by a drawbolt and the rotary motion is transmitted to the cutters. *Fig. 5.10 shows a collet.*

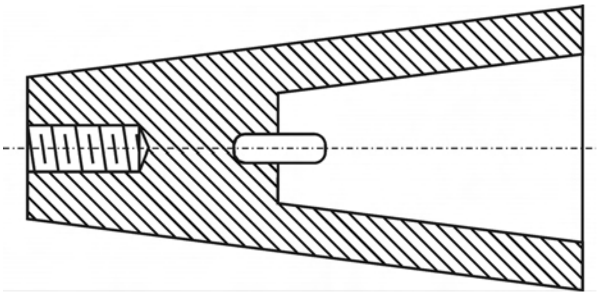

Fig 5.10 Collet

5.8.3 Adapters

Milling cutters having shanks are generally mounted on adapters. The outside taper of the adapter conforms to the taper hole of the spindle. The shank of the cutter fits into the taper hole of the adapter. *An adapter is shown in Fig. 5.11*

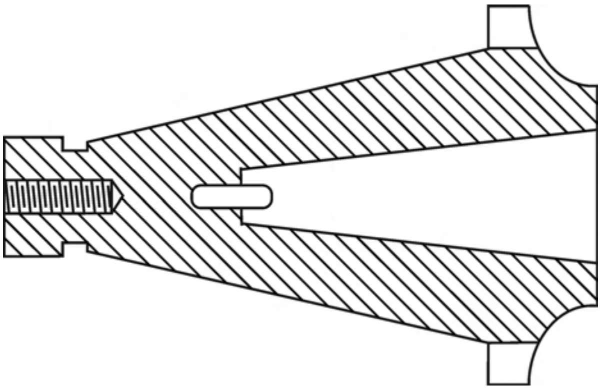

Fig 5.11 Adapter

5.8.4 Screwed arbor

The small cutters having threaded holes at the center are held by screwed arbors. It has a threaded nose at one end and a taper shank at the other end. The shank of the arbor is mounted on the spindle. *A Screwed arbor is illustrated in Fig. 5.12.*

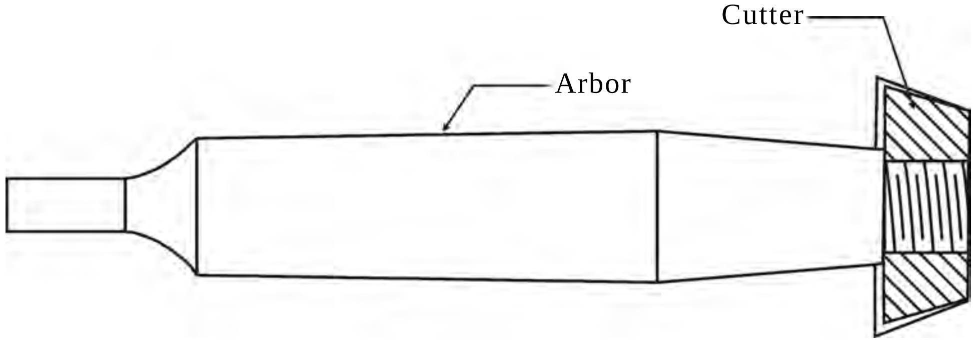

Fig 5.12 Screwed arbor

5.9 Milling machine attachments

The milling machine attachments are intended for the purpose of developing the range of operations, versatility, production capacity and accuracy of machining process. The different milling machine attachments are:

1) Vertical milling attachment
2) Universal milling attachment
3) High speed milling attachment
4) Slotting attachment
5) Rotary table attachment
6) Indexing head attachment

5.9.1 Vertical milling attachment

A horizontal milling machine is converted into a vertical milling machine by the vertical milling attachment. Vertical milling attachment is mounted on the face of the column of the horizontal milling machine. The attachment along with the spindle can be swiveled to any angle for machining angular surfaces.

5.9.2 Universal milling attachment

By having the universal milling attachment, the spindle of the machine can be swiveled about two perpendicular axes. This arrangement permits the spindle axis to be swiveled at practically any angle to machine any angular surface of the work. This attachment is supported to the over arm to operate it at higher spindle speeds.

5.9.3 High speed milling attachment

This attachment is used to increase the regular spindle speeds by four to six times. Milling cutters of smaller diameters are operated efficiently at higher cutting speeds. This attachment is bolted to the face of the column and enables the cutter to be operated at speeds beyond the scope of the machine.

5.9.4 Slotting attachment

The rotary movement of the spindle is converted into reciprocating movement of the ram by a crank arrangement. This attachment makes the milling machine to be converted into a slotting machine by accepting a single point slotting tool. The tool is mounted on the ram and used for cutting internal or external keyways, splines etc., It can also be swiveled to machine angular surfaces.

5.9.5 Rotary table attachment

It is a special device bolted on top of the machine table to provide rotary motion to the workpiece in addition to the longitudinal, cross and vertical movements of the table. It consists of a circular table provided with 'T' – slots mounted on a graduated base. The driving mechanism of this attachment is made possible by a worm and worm gear.

5.9.6 Indexing head attachment

It is a special work holding device used for dividing the periphery of the work into any number of equal divisions. The work is held in a chuck of the dividing head spindle or supported between centers. It is also used in shaping machines and slotting machines. While machining gears, spirals, clutches and ratchets, this dividing head is used to divide the circumference of the work into any number of equal parts.

5.10 Standard milling cutters

There are different types of milling cutters used in a milling machine. A suitable milling cutter is selected according to the need. They are

1. Plain milling cutter
2. Side milling cutter
3. Metal slitting saw
4. Angle milling cutter
5. End milling cutter
6. 'T' – Slot milling cutter
7. Fly cutter
8. Formed cutter

5.10.1 Plain milling cutter

Plain milling cutters are cylindrical in shape and have teeth on the circumferential surface only. They are used for producing flat surfaces parallel to the axis of rotation of the spindle. The teeth of the cutter may be straight or helical according to the size. If the width of the cutter is more, it is called as slabbing cutter or cylindrical milling cutter. They have a central hole in order to be mounted on the arbor. Plain milling cutters have nicked teeth to break the chips into small pieces. Helical plain milling cutters are superior to a straight plain milling cutter. *A plain milling cutter is illustrated in Fig. 5.13 & 5.14.*

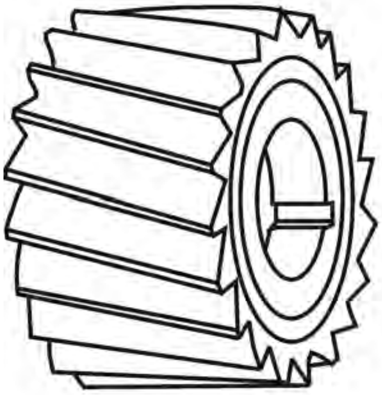

Plain milling cutter

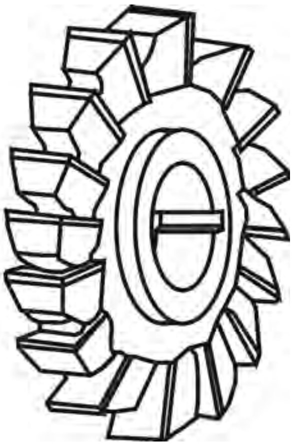

Side and face milling cutter

Fig 5.13 Pictorial views of milling cutters

5.10.2 Side milling cutter

Side milling cutters have teeth on its periphery and also on one or both of its sides. They are intended for removing metal from the sides of the workpiece. There are different types of side milling cutters namely face and side milling cutter, half side milling cutter, staggered teeth side milling cutter, and interlocked side milling cutter. Machining is performed by selecting a proper milling cutter. *A side milling cutter is illustrated in Fig. 5.13 & 5.15.*

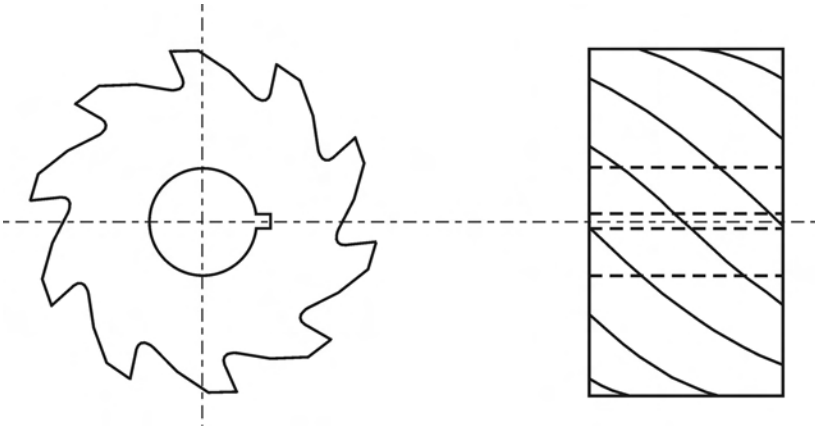

Fig 5.14 Plain milling cutter

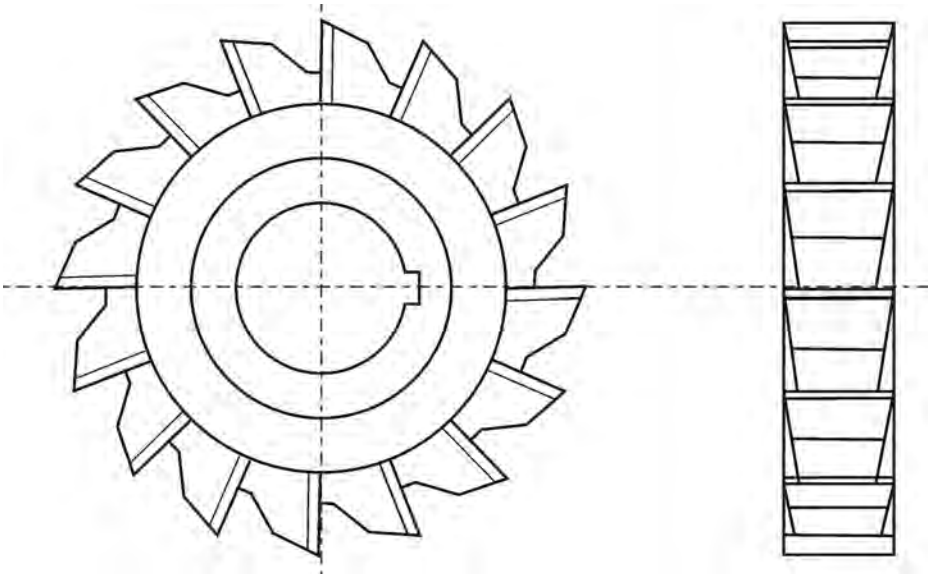

Fig 5.15 Side milling cutter

5.10.3 Metal slitting saw

It is intended for cutting narrow, deep slots and for parting off operation. The teeth are cut on the circumference of the cutter. The width of the cutter is limited. The outside diameter of the cutter will be upto 200mm and width of the cutter ranges from 0.75mm to 7mm. The side of the cutter is relieved so that the side may not rub against the work.

A metal slitting saw is illustrated in Fig. 5.16.

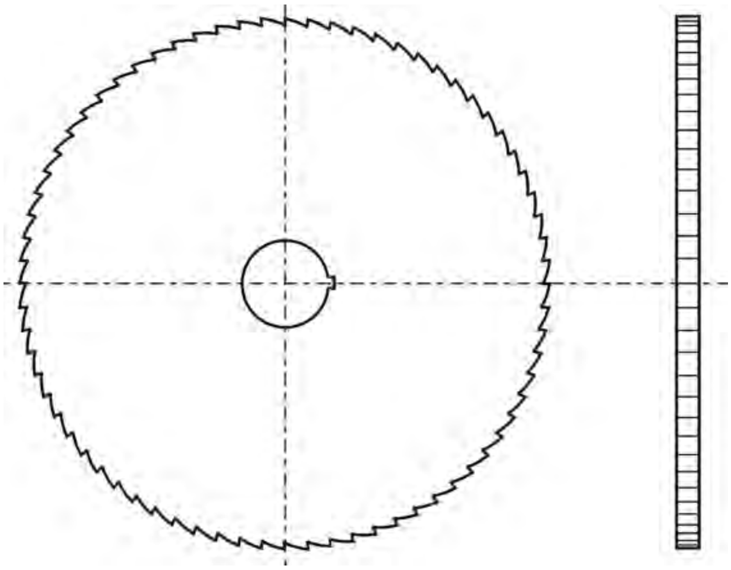

Fig 5.16 Metal slitting saw

5.10.4 Angle milling cutter

The teeth of the angle milling cutter are not parallel to the axis but are at an angle to it. By using angle milling cutter, inclined surfaces, bevels and helical grooves are machined. There are two types of angle milling cutter – Single angle milling cutter and double angle milling cutter. *Fig. 5.17 shows a single angle milling cutter.*

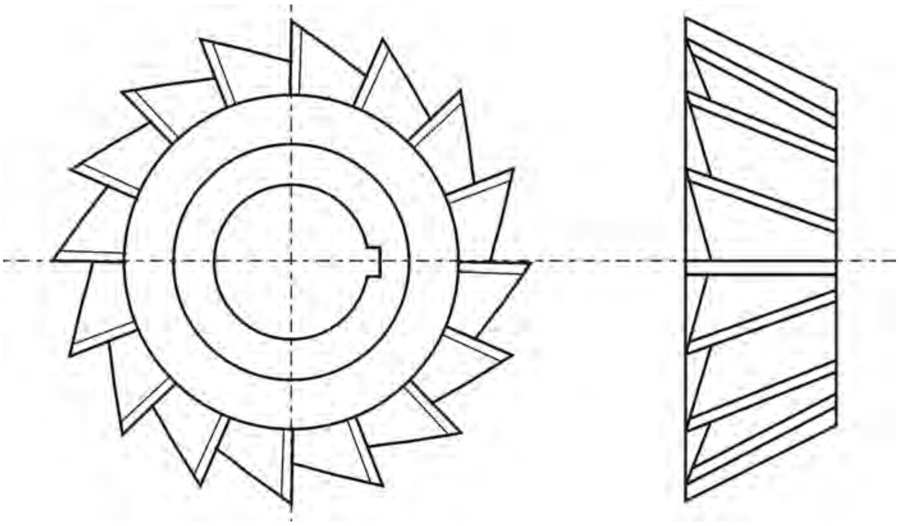

Fig 5.17 Angle milling cutter (Single)

5.10.5 'T' – Slot milling cutter

It is a special form of end mills intended for machining 'T'- slots. It looks like a side milling cutter with a shank. The cutters have cutting teeth on the periphery as well as on both sides of the cutter. *Fig. 5.18 shows a 'T' – Slot milling cutter.*

5.10.6 End mill

These cutters have cutting teeth on the end as well as on the periphery of the cutter. It is made of two parts – body and shank. The shanks of the cutter may be straight or taper. If the cutter doesn't have a shank it is called shell end milling cutter. These cutters are useful in machining long narrow slots, holes and flat surfaces. *A End mill is illustrated in Fig. 5.19.*

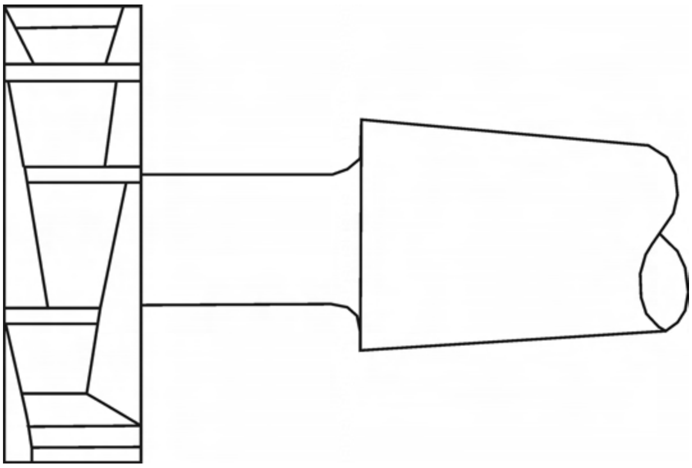

Fig 5.18 'T' slot milling cutter

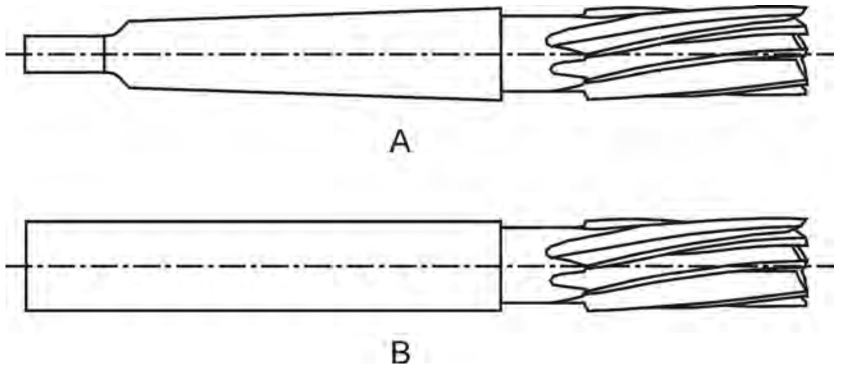

Fig 5.19 End milling cutters
A - Taper shank B - Straight shank

5.10.7 Fly cutter

Fly cutter is the simplest form of cutter. It consists of a single point cutting tool attached to the end of the arbor. The cutting edge may be formed to reproduce a contoured surface. They are used when standard cutters are not available. The work is done very slowly because of a single cutting edge. *A fly cutter is shown in Fig. 5.20.*

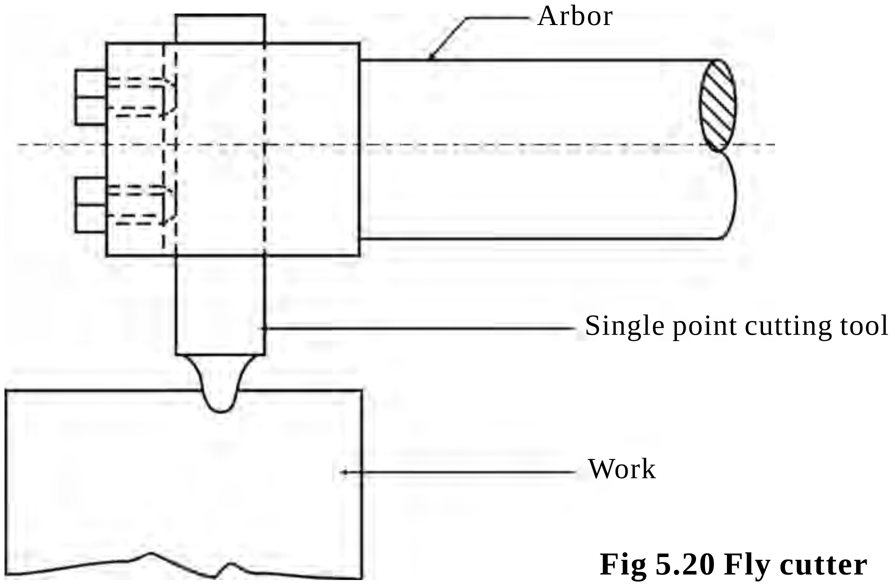

Fig 5.20 Fly cutter

5.10.8 Formed cutter

Formed cutters have irregular profiles on their cutting edges to produce required outlines on the work. Concave and convex milling cutters are used to produce convex and concave surfaces respectively. Using gear milling cutters, gears are machined. Corner round milling cutters are used for cutting a radius on the edges of the work. With the help of thread milling cutters threads are milled to a specific form and size. Tap and reamer cutters are used for producing grooves or flutes in taps and reamers.

5.11 Elements of a plain milling cutter

The main parts and angles of a plain milling cutter *as shown in Fig. 5.21* are described below:

Body of cutter: It is the part of the cutter left after exclusion of the teeth.

Face: The portion of the teeth next to the cutting edge is known as face.

Land: The relieved back portion of the tooth adjacent to the cutting edge. It is relieved to avoid interference between the surface being machined and the cutter.

Outside diameter: The diameter of the circle passing through the peripheral cutting edges.

Central hole: It refers to the hole present at the centre of the cutter. A keyway is cut inside the hole

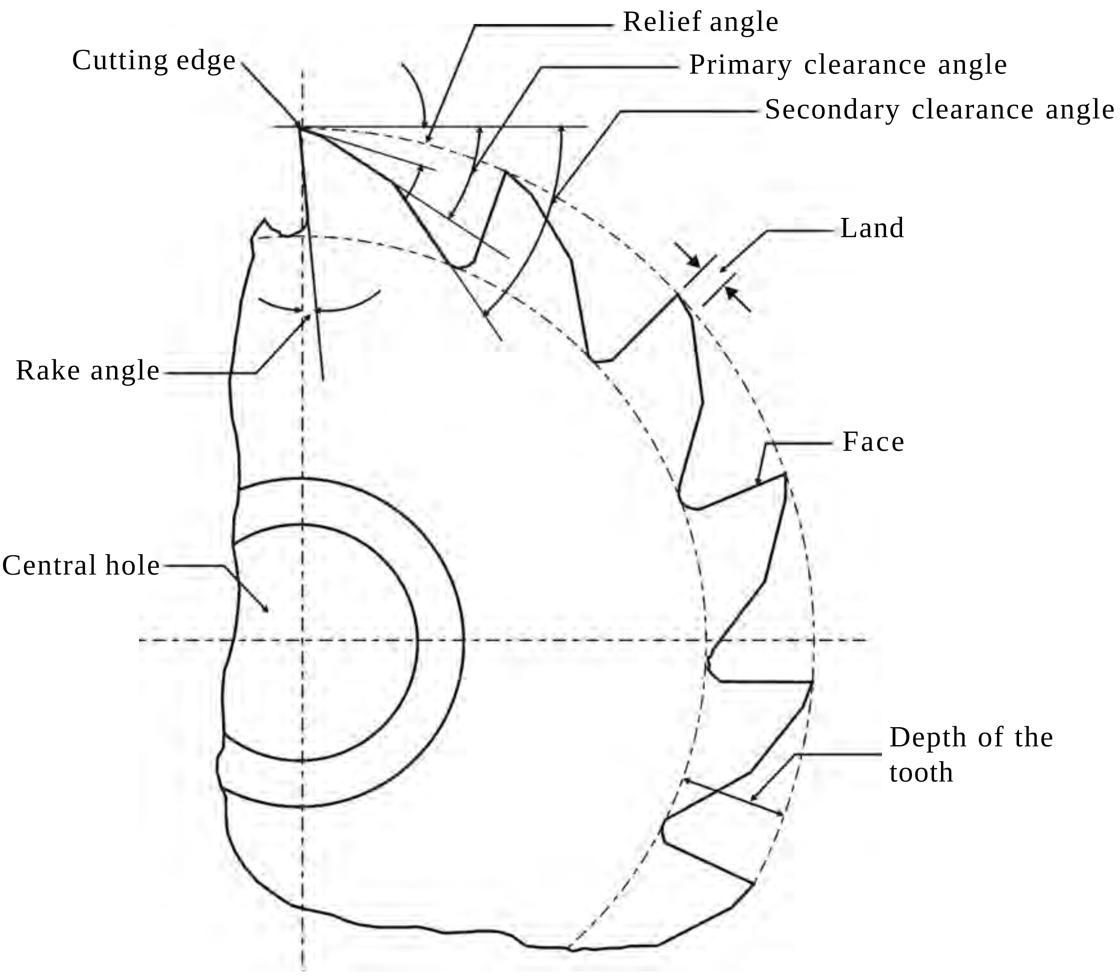

Fig 5.21 Nomenclature of a plain milling cutter

Cutter angles

Relief angle: It is angle the between the land of the tooth and the tangent to the outside diameter of the cutter at the cutting edge of the particular tooth. (approx 7.5 °)

Primary clearance angle: It is the angle between the back of the tooth and the tangent drawn to the outside diameter of the cutter at the cutting edge. (approx 15 °)

Secondary clearance angle: It is the angle formed by the secondary clearance surface and the tangent to the periphery of the cutter at the cutting edge.

Rake angle: The angle measured in the diametral plane between the face of the tooth and a radial line passing through the cutting edge of the tooth. The rake angles may be positive, negative or zero. If the face and the tooth body are on the same side of the radial line, the rake angle between the radial line and the tooth face is positive.The tooth face and tooth body may be on opposite sides of the radial line. Then the rake angle is negative. If the radial line and the tooth face coincide in the diameter plane the rake angle is zero.

5.12 Milling cutter materials

The milling cutters are generally made of the following materials.

1. Tool steel - High speed steel (HSS)
   - High carbon steel (HCS)
2. Cemented carbide
3. Stellite

In general shop work, the high speed steel cutters are most widely used.

5.13 Milling machine operations

The following operations are performed using suitable milling cutters.

1. Plain milling
2. Face milling
3. Side milling
4. Straddle milling
5. Angular milling
6. Gang milling
7. Form milling
8. End milling
9. Flute milling
10. Keyway milling
11. Drilling & reaming
12. Boring
13. Gear cutting
14. Thread milling
15. Cam milling

5.13.1 Plain milling

It is the operation of production of a flat surface parallel to the axis of rotation of the cutter. It is also called as slab milling. Plain milling cutters and slab milling cutters are used to perform this operation. *Fig. 5.23 shows plain milling operation.*

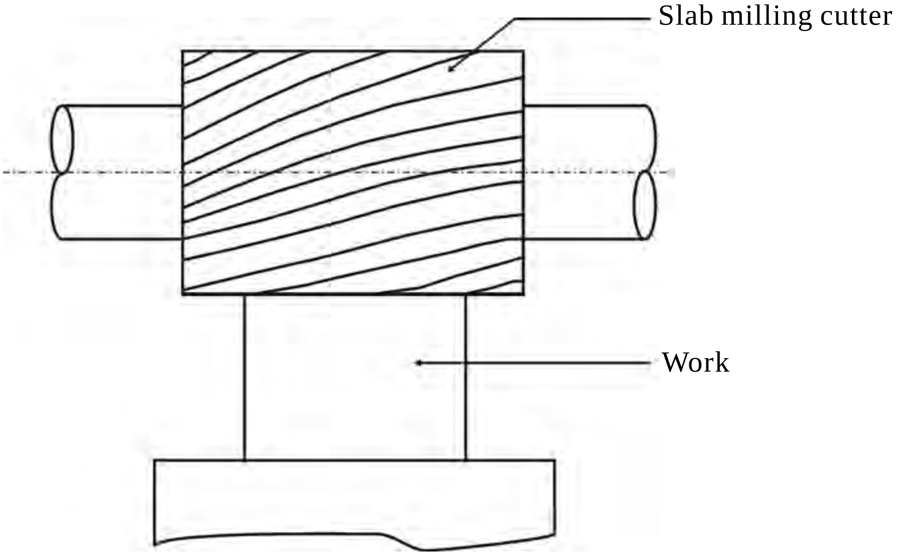

Fig 5.22 Plain milling operation

5.13.2 Face milling

The face milling is the operation performed by the face milling cutter rotated about an axis at right angles to the work surface. End mills and side & face milling cutter are also used at times to perform this operation. The depth of cut is provided to the table. *Fig. 5.23 shows face milling operation.*

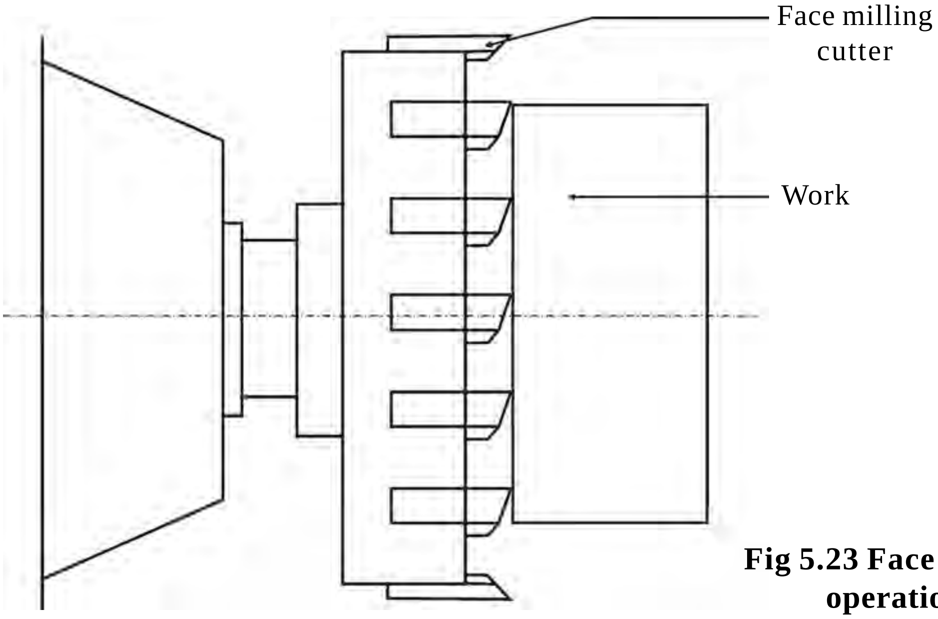

Fig 5.23 Face milling operation

5.13.3 Side milling

Side milling is the operation of machining a vertical surface on the side of a workpiece by using a side milling cutter.

5.13.4 Straddle milling

It is the operation of production of two vertical surfaces on both sides of the work by two side milling cutters mounted on the same arbor. By using suitable spacing collars, the distance between the two cutters is adjusted correctly. The straddle milling is commonly used to produce square or hexagonal surfaces.

Fig. 5.24 shows straddle milling operation.

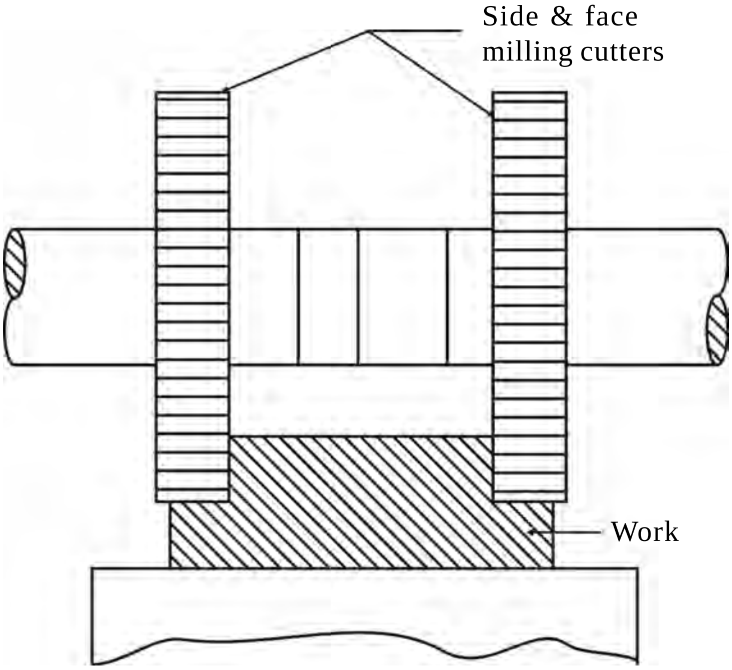

Fig 5.24 Straddle milling operation

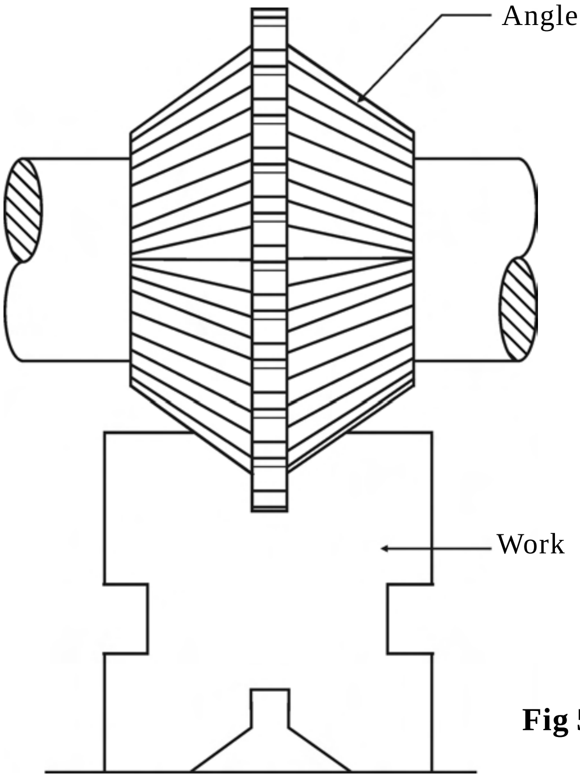

Fig 5.25 Angular milling operation

5.13.5 Angular milling

Production of an angular surface on a workpiece other than at right angles to the axis of the milling machine spindle is known as angular milling. Example of angular milling is the production of the 'V' blocks. *Fig. 5.25 shows angular milling operation.*

5.13.6 Gang milling

It is the operation of machining several surfaces of work simultaneously by feeding the table against a number of cutters (either of same type or of different type) mounted on the arbor of the machine. This method saves much of machining time and mostly used in production work. *Fig. 5.26 shows gang milling operation.*

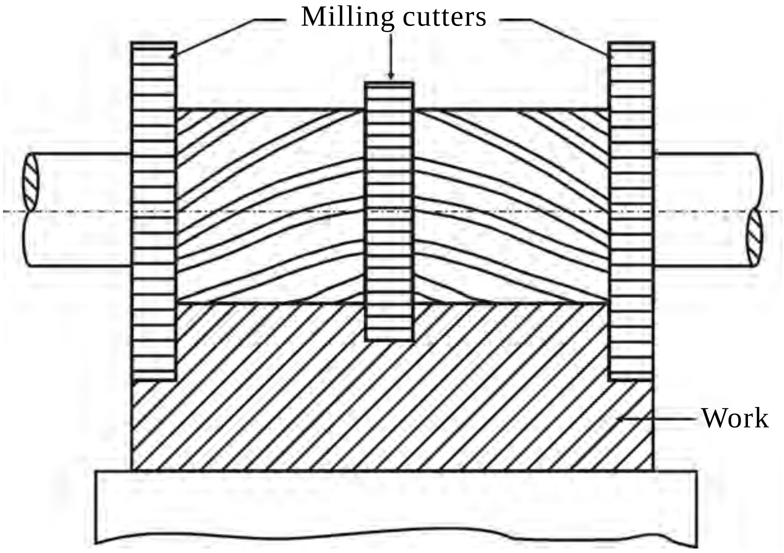

Fig 5.26 Gang milling operation

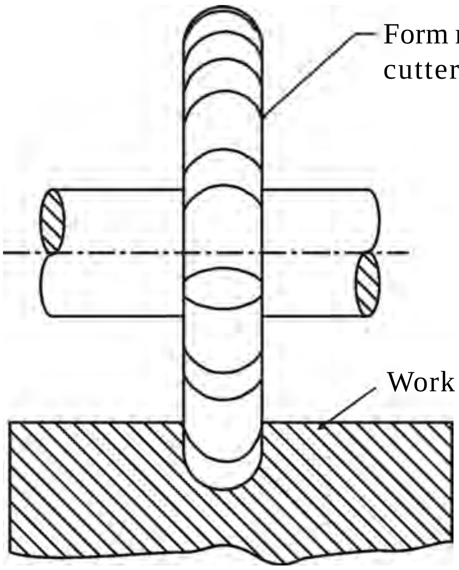

Fig 5.27 Form milling operation

5.13.7 Form milling

The form milling is the operation of production of irregular contours by using form cutters. Machining convex and concave surfaces and gear cutting are some examples of form milling. *Fig. 5.27 shows form milling operation.*

5.13.8 End milling

It is the operation of producing a flat surface which may be vertical, horizontal or at an angle to the table surface. The end milling is performed by a cutter known as an end mill. End milling is mostly performed in a vertical milling machine.

Fig. 5.28 shows end milling operation.

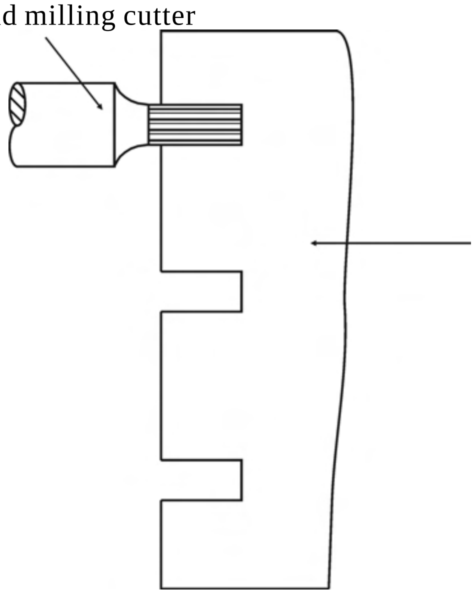

Fig 5.28 End milling operation

5.13.9 Flute milling

Flute milling is performed by selecting a suitable cutter in a milling machine. The flutes found on the drills, reamers and taps are machined by this method.

5.13.10 Keyway milling

The operation of production of keyways, grooves and slots of different shapes and sizes can be performed in a milling machine by using a plain milling cutter, a metal slitting saw, an end mill or by a side milling cutter.

5.13.11 Drilling and reaming

The operation of drilling and reaming are performed in a milling machine by mounting drills and reamers into the spindle of the machine.

5.13.12 Boring

A single point cutting tool is mounted on the arbor to perform boring. By adjusting the single point cutting tool radially, different diameters of bores are machined.

5.13.13 Gear cutting

Gear cutting operation is performed in a milling machine by using a form cutter. The work is held between centers on a universal dividing head. A proper gear cutter is selected and the teeth are cut by DP, module method.

5.13.14 Thread milling

This operation is performed in a special thread milling machine by rotating both the work and the cutter. Several cuts are made to cut the threads to their depth.

5.13.15 Cam milling

Cam milling is the operation of producing cams in a milling machine with the use of a universal dividing head and a vertical milling attachment. It is performed by end mills on the cam blank.

5.14 Cutting speed, feed and depth of cut

5.14.1 Cutting speed

It is the distance travelled by a point on the cutting edge of the milling cutter to remove metal in time duration of one minute. It is expressed in meters per minute.

$$\text{Cutting Speed} = \frac{\pi DN}{1000} \text{ meter / minute}$$

Where: D = The diameter of the milling cutter in mm

N = Spindle speed in rpm

The cutting speed depends upon the material to be machined, the cutter material, depth of cut, feed, type of operation and the coolant used.

Example: *Calculate the cutting speed to perform milling with a cutter of diameter 60mm and spindle speed of 250rpm.*

Solution:

Given: Diameter of cutter (D) = 60 mm

Spindle speed (N) = 250 rpm

$$\text{Cutting Speed} = \frac{\pi DN}{1000} \text{ meter / minute}$$

$$= \frac{22 \times 60 \times 250}{7 \times 1000}$$

$$= 47.14 \text{ metre / minute}$$

5.14.2 Feed

The feed in a milling machine is defined as the distance the workpiece advances under the cutter. Feed can be expressed in three different methods:

1. Feed per tooth: It is the distance the work advances in the time between engagements by the two successive teeth. It is expressed in mm per tooth.

2. Feed per cutter revolution: It is the distance the work advances in the time when the cutter turns through one complete revolution. It is expressed in mm per revolution of the cutter.

3. Feed per minute: It is the distance the work advances in one minute. It is expressed in mm per minute.

The feed in a milling machine depends on the material to be machined, cutter material, depth of cut, cutting speed, type of operation and the rigidity of the machine.

5.14.3 Depth of cut

The depth of cut is the thickness of the material removed in one pass of the work below the cutter. It is expressed in mm.

5.15 Indexing head

Indexing is the method of dividing the periphery of a piece of work into any number of equal parts. The attachment used for performing indexing is known as indexing head.

The indexing operation can be adapted for cutting gears, ratchet wheels, keyways, fluted drills, taps and reamers. The indexing head serves as an attachment for holding and indexing the work in doing the above tasks. There are three different types of indexing heads namely

1. Plain or simple dividing head
2. Universal dividing head
3. Optical dividing head.

5.15.1 Construction of indexing head

The construction of a universal dividing head as shown in Fig. 5.29 & 5.30 is explained below:

Base

The base of the indexing head is fitted in the 'T' – slots of the milling machine table. It supports all the other parts of dividing head.

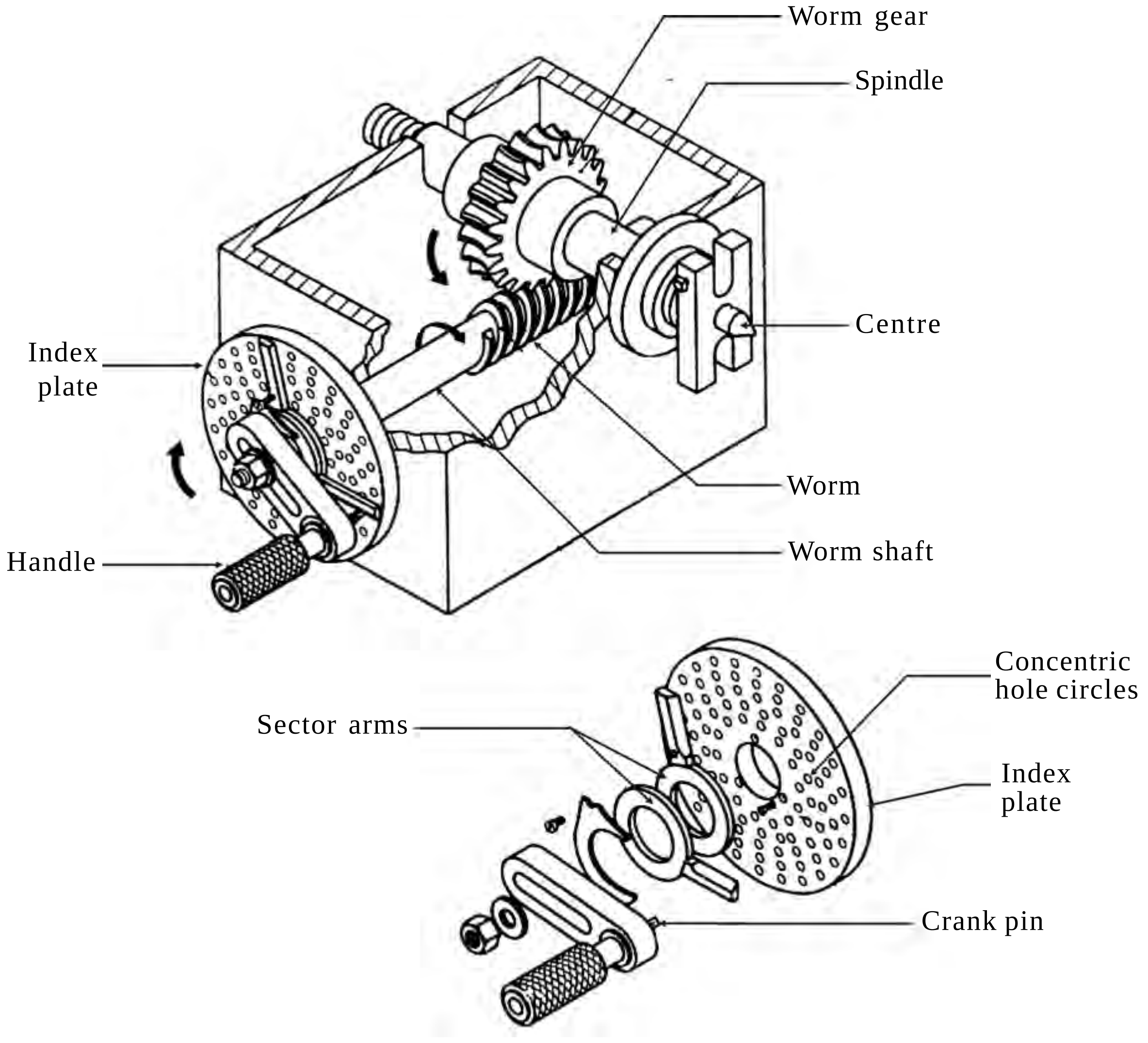

Fig 5.29 Construction of a index head

Spindle

The spindle is situated at the centre of the dividing head. It has a taper hole to receive a live center. The spindle is supported on a swiveling block, which makes the spindle to be tilted through any angle from 5° below horizontal to 10° beyond vertical. A worm wheel is mounted on the spindle. While doing direct or rapid indexing, the index plate is directly fitted on the front end of the spindle nose.

Worm shaft

It is situated at right angles to the main spindle of the dividing head. A single threaded worm is mounted on the worm shaft, which meshes with the worm wheel. An index plate is fitted on the front end of the worm shaft and with the help of a handle the worm shaft can be rotated to a predetermined amount.

Index plate

It is mounted on the front end of the worm shaft. It is a circular disk having different numbers of equally spaced holes arranged in concentric circles. The crank is positioned in the required hole circle and rotated through a calculated amount while indexing. The sector arm is used to eliminate the necessity of counting the holes on the index plate each time the index crank is moved.

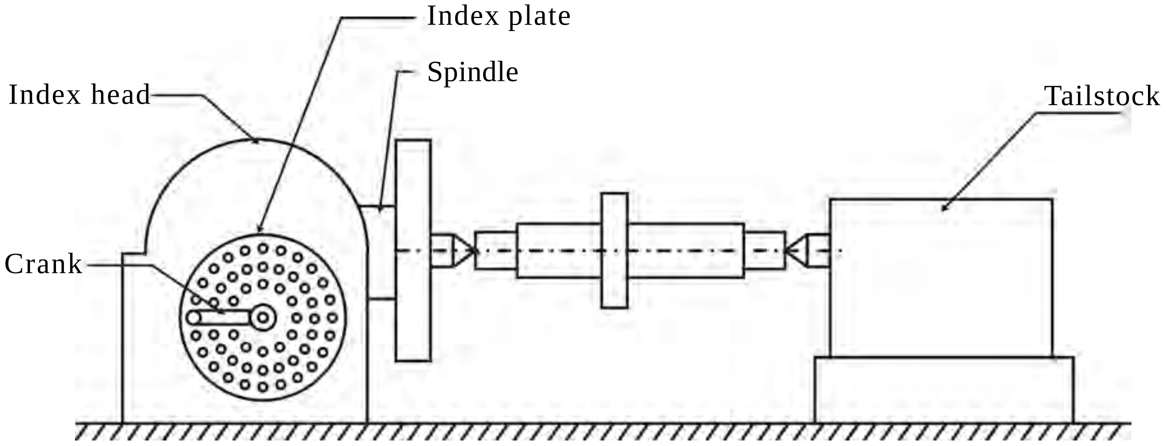

Fig 5.30 Index head

Driven shaft

It is parallel to the spindle and perpendicular to the worm shaft.

Dead center

The work is held between the center of the spindle and the dead center. It can be made to slide and positioned at the required location.

5.15.2 Working principle of dividing head

When the crank is rotated with help of a handle through the required number of holes in the index plate, the work is rotated to required amount. This is possible because of the worm and worm wheel mechanism.

A gear train is arranged between the main spindle and the driven shaft when indexing is done by differential indexing method. The work is rotated as usual when the handle is rotated. At the same time, the index plate is also made to rotate a small amount through the gear train. When indexing is by this differential indexing method, the index plate is released from the lock pin.

5.16 Indexing methods

There are several methods of indexing and they are

1. Direct or rapid indexing
2. Plain or simple indexing
3. Compound indexing
4. Differential indexing
5. Angular indexing

5.17 Safety precautions

Before operating the milling machine, the operator should know how to operate various controls of the machine. It should be ensured that the workpiece is held rigidly on the milling machine table. The cutter should not be in contact with the work even before the machining is commenced. The spindle speed of the machine should not be altered when the machine is in operation. When the power of the machine is 'ON', the arbor nut should not be removed or tightened. The operator should keep his body away from the rotating cutter. No steps should be taken to measure the workpiece while the cutter is cutting or revolving near the workpiece. When the machine is in operation, safety guards should be placed in their positions to prevent coolant and metal chips from spilling out.

The metal chips should be removed with suitable brushes and not with bare hands. The operator should seek assistance from others while handling special attachments and heavy workpieces. The operator should always be present in person at the machine tool when the machine is in operation.

The machine tool should always be started and stopped by the operator himself. Dangers can be averted by handling the cutters with sharp cutting edges with great care. The machine tool should be kept clean. Milling cutters and measuring instruments should not be placed on the machine.

The attention of the operator should always be focussed on the task only. When troubles happen in the machine, they should be corrected with the assistance of proper technicians. In general, safety should be ensured to the operator, the workpiece and the cutting tool.

QUESTIONS

I .A Choose the correct option

1. Milling machine was developed by

   a. Henry Maudslay b. Eli Whitney c. James Nasmith d. Michael Faraday

2. In a milling machine, cutters are mounted on

   a. column b. spindle c. overhanging arm d. arbor

3. The amount of table travel is controlled by

   a. saddle b. trip dogs c. cross-slide d. elevating screw

4. The distance travelled by a point on a milling cutter in one minute is known as

   a. cutting speed b. depth of cut c. spindle speed d. feed

I.B. Answer the following questions in one or two words

1. What is the base of a milling machine made of ?
2. Name the part which holds the other end of the arbor in a milling machine.

II. Answer the following questions in one or two sentences

1. What is milling?
2. What are the types of milling machines?
3. How is the size of a milling machine specified?
4. Name the fundamental milling processes.
5. What are the types of peripheral milling?
6. Name four work holding devices in a milling machine.
7. What is indexing?
8. What is the use of indexing head?
9. What are the types of indexing head?
10. What are the methods of indexing?

III. Answer the following questions in about a page

1. What are the differences between a plain milling machine and a universal milling machine?
2. List out various milling machine attachments.
3. Name the milling cutters.
4. What are the different milling machine operations?

IV. Answer the following questions in detail

1. Draw a neat diagram of a milling machine and explain its construction.
2. Explain - Upmilling, Down milling.
3. Explain any four cutter holding devices with diagrams.
4. Draw a neat diagram of a plain milling cutter and explain its nomenculature.

6. HYDRAULIC EQUIPMENTS

6.1 Introduction

The volume of a liquid cannot be changed by applying pressure. This property of liquids forms the base of study of hydraulics. In modern metal working plants, hydraulic pressure is being used to operate practically every type of machine tool.

6.2 Hydraulic pumps

Hydraulic pump is a device, which transforms mechanical energy into hydraulic energy. It serves as the heart of the hydraulic circuit. It provides the force used to move the load in the circuit but the pressure of the circuit is not developed by the pump. The pressure built up in a circuit is because of the quantity of the oil or the setting of the pressure relief valve.

6.2.1 Principle of a hydraulic pump

Every hydraulic pump has an inlet and an outlet. Partial vacuum is created at the inlet port because of the rotation of the impeller. Hydraulic liquid is forced to flow from the reservoir because of this vacuum through a pipeline and is pumped out through the outlet.

6.2.3 Size of the pump

The size of the pump is specified by the quantity of the oil to be pumped, suction head (the depth from which oil is to be sucked) and the delivery head (the height upto which oil is to be pumped).

6.3 Types of hydraulic pump

Hydraulic pumps are classified according to three different features

A. According to the displacement of hydraulic liquid

i) Positive displacement pump

ii) Non-positive displacement pump

B. According to the volume of outlet

i) Constant delivery pump

ii) Variable delivery pump

C. According to the nature of movement of the moving part

i) Rotary pump

ii) Reciprocating pump.outlet

6.3.1 Features of positive displacement pump

1. It can pump against high pressures.

2. It can handle small amount of oil at high pressures

3. When the pump is working against high pressures, the volume of the outlet will not have any slip. So the outlet should not be closed while pumping as it will cause damage to the pump. A pressure relief valve is connected to the circuit next to this pump.

4. This pump has got self priming (The pump can draw liquid from the reservoir).

6.3.2 Features of non-positive displacement pump

1. It cannot pump against high pressure.

2. It can handle more amount of oil at low pressure.

3. A slip in volume will be felt when the pump is working against at high pressures. Even if the outlet is closed, it will not cause any damage to the pump.

4. Self-priming is not possible.

6.4 Centrifugal pump

6.4.1 Types of centrifugal pump

A. According to head of liquid

a. Low lift pump

b. Medium lift pump

c. High lift pump

B. According to type of the casing

a. Volute casing pump

b. Vortex casing pump

c. Diffuser casing pump

C. According to number of impellers

a. Single stage pump

b. Multi stage pump

D. According to the type of impeller

a. Closed impeller pump

b. Semi-open impeller pump

c. Open impeller pump

E. According to direction of flow of oil

a. Radial flow type

b. Axial flow type

c. Mixed flow type

Fig. 6.1 shows the types of casings of a centrifugal pump.

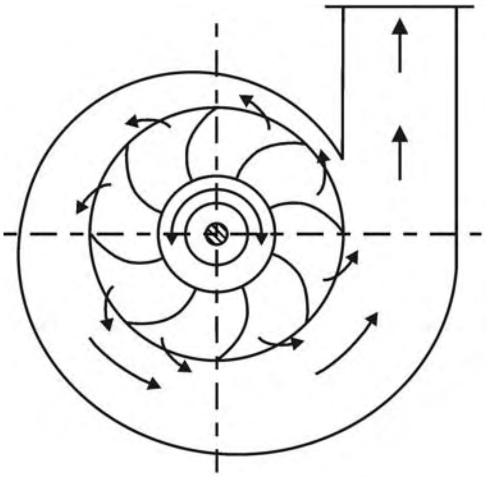

Volute casing

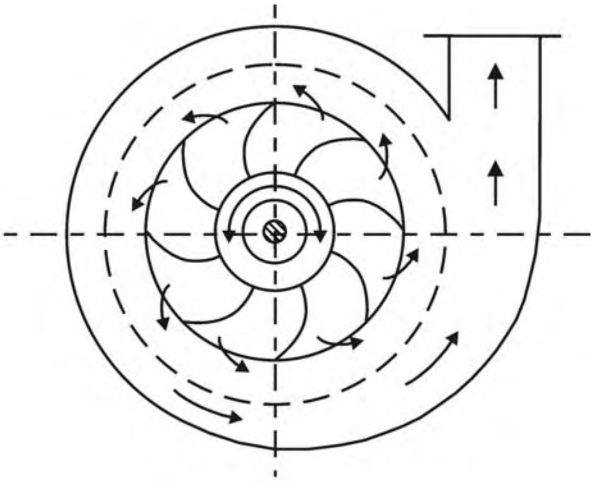

Vortex casing

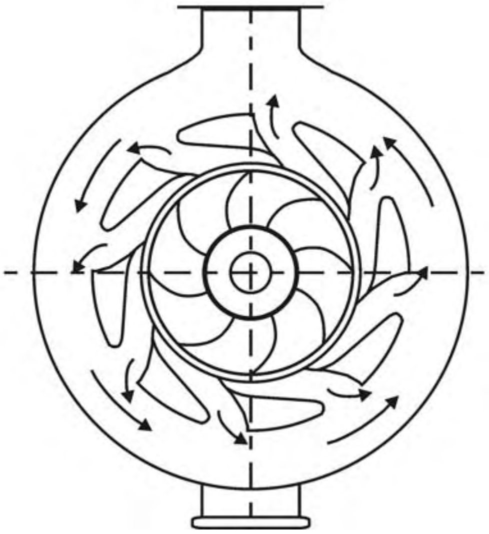

Diffuser ring casing

Fig 6.1 Types of centrifugal pumps (according to the type of the casing)

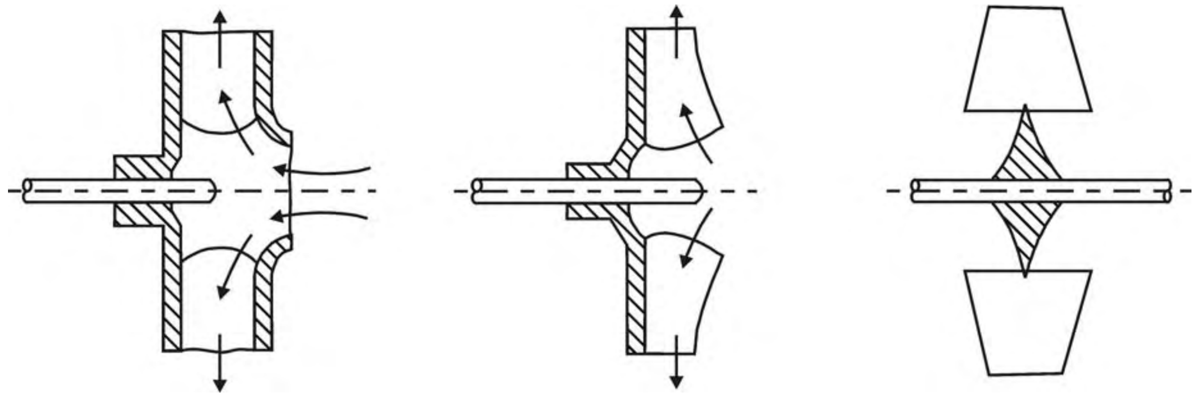

Fig 6.2 Types of centrifugal pumps (according to the type of impeller)

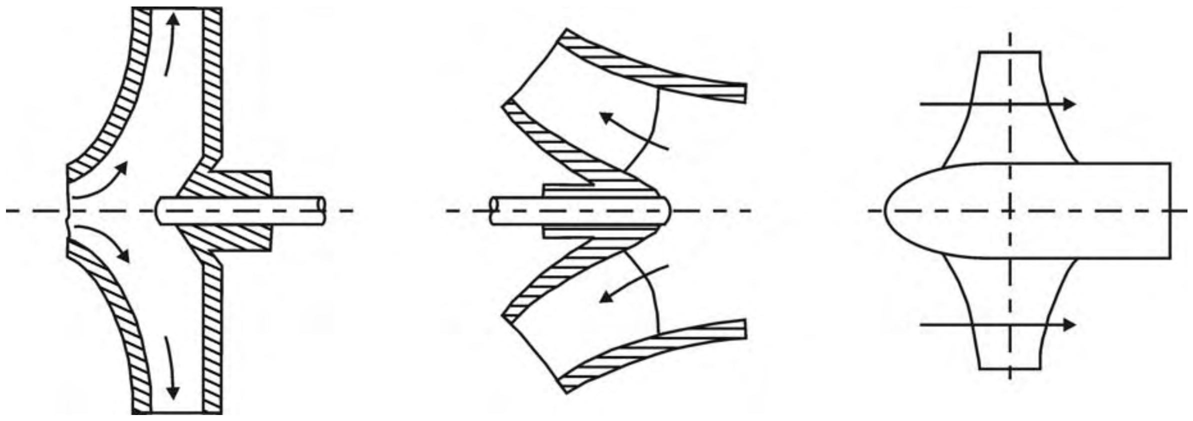

Fig 6.3 Types of centrifugal pumps (according to the direction of flow of liquid)

Fig. 6.2 shows the types of impellers of a centrifugal pump. Fig.6.3 shows various methods of flow of liquid in a centrifugal pump.

6.4.2 Main components of a centrifugal pump

1. Prime mover
2. Impeller
3. Casing
4. Suction pipe
5. Delivery pipe

Prime mover

The prime mover of a pump shall be an electric motor or a oil engine. It provides the rotational power to the shaft of the device.

Impeller

It is the rotating part of the device. Vanes or blades are arranged in series on it. The vanes are fitted on the shaft and rotated by the prime mover.

Casing

Casing is a hollow chamber surrounding the impeller. It is made as an air-tight unit. The sectional area of the casing gradually increases in the direction of the flow of liquid. This construction ensures the decrease in the velocity of the liquid and increase of the pressure.

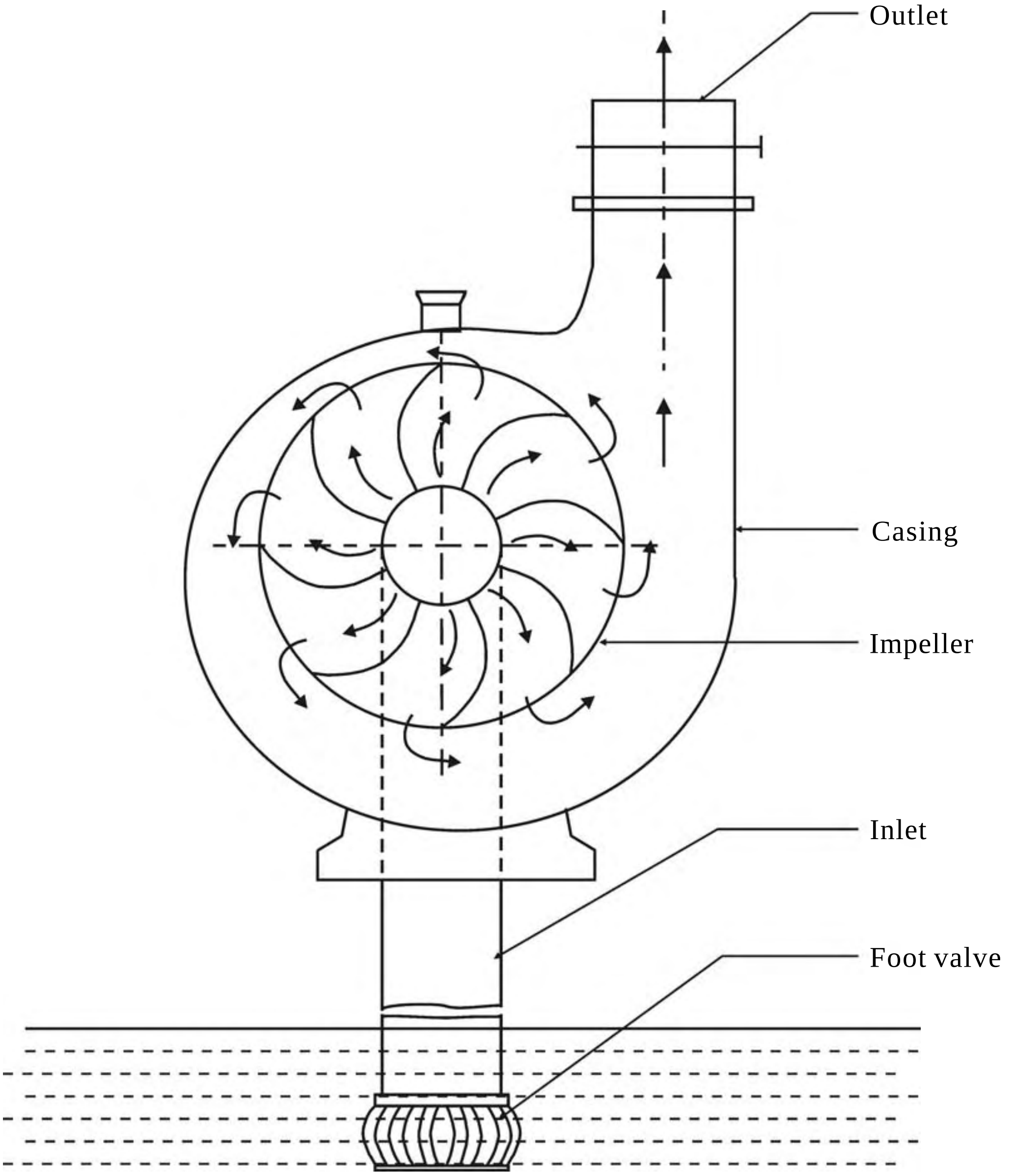

Fig 6.4 Centrifugal pump

Suction pipe

The top of the suction pipe is connected to the impeller (inlet). The bottom end is attached with a foot valve and a strainer.

Delivery pipe

The lower end of the delivery pipe is connected to the outlet of the pump. The liquid is pumped out through the other end of the pipe.

6.4.3 Working of centrifugal pump

Before the pump is set on for pumping, priming is done. Priming is done by filling water in the suction pipe and the impeller. While doing so, the air valve is opened. As a result, no air pocket is left in the casing. The presence of any air will certainly decrease the sucking capacity of the impeller.

After the priming is over, the pump is started. The prime mover operates the impeller. The vanes on the impeller creates centrifugal force inside the casing. Vacuum is created at the centre of the impeller(eye). Water from the reservoir reaches the casing through the inlet. Due to the centrifugal force, water is thrown radially outwards. As the sectional area of the casing gradually increases, velocity energy of the liquid is transformed into pressure energy. The liquid with increased pressure is pumped to a required height through the outlet. As the impeller goes on rotating, more water is pumped out.

Fig. 6.4 illustrates the working of a centrifugal pump.

6.4.4 Applications of centrifugal pump

1. Water pumphouses
2. Sewage treatment
3. Irrigation
4. Oil refineries

6.4.5 Advantages and disadvantages of centrifugal pump

1. Durability
2. Low cost
3. Suitable for pumping coolant
4. Low efficiency
5. Limited to be used at low pressure

6.5 Reciprocating pump

Reciprocating pump is one in which the liquid is pumped by the reciprocating action of the moving part known as a piston or a plunger inside a cylinder.

6.5.1 Types of reciprocating pump

A. According to the shape of the reciprocating part

a. Piston pump

b. Plunger pump

B. According to the action of the liquid

a. Single acting pump

b. Double acting pump

C. According to number of cylinders

a. Single cylinder pump

b. Multi cylinder pump

6.5.2 Components of a reciprocating pump

1. Cylinder
2. Piston
3. Connecting rod
4. Crank
5. Suction pipe
6. Suction valve
7. Delivery pipe
8. Delivery valve

Cylinder

Cylinder is a hollow part inside of which is accurately machined. Piston reciprocates within the cylinder.

Piston

Piston is the reciprocating part of the pump. A connecting rod is connected to it on one side.

Connecting rod

Connecting rod is attached to piston on one end and with a crank on the other end. It converts the rotary motion of the crank into reciprocating motion of the piston.

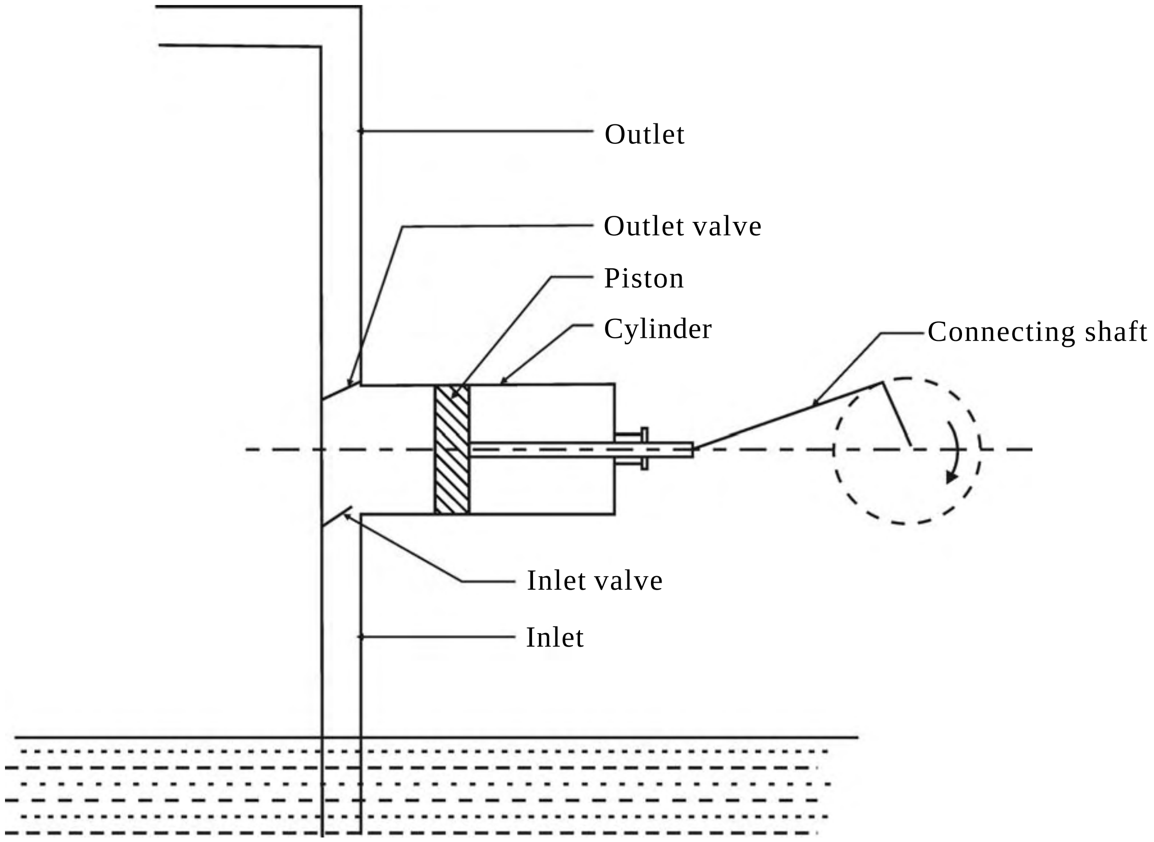

Fig 6.5 Reciprocating pump

6.5.3 Working of a reciprocating pump

When the crank is made to rotate by means of prime mover, the piston reciprocates within the cylinder to pump out the liquid.

Suction stroke

As shown in Fig. 6.5, when the piston starts moving towards right, a vacuum is created on the left of the cylinder. The suction valve opens and the liquid is sucked through the suction pipe into the cylinder. The delivery valve remains closed at this stage.

Delivery stroke

Due to the rotation of the crank, piston is moved towards left. The piston exerts pressure on the liquid inside the cylinder and the delivery valve opens. The liquid is thrown through the delivery pipe with pressure. At this stage, the suction valve remains closed.

On continuous reciprocation of the piston, liquid is sucked and pumped contiuously.

6.5.4 Applications of reciprocating pump

1. Pumping sea water, ship and marine field
2. Air pumping devices
3. Filling water in small grade boilers
4. Oil pumping

6.5.5 Differences between a centrifugal pump and a reciprocating pump

Centrifugal pump	Reciprocating pump
1. Handles high volumes of liquid.	1. Handles less volumes of liquid.
2. Practically handles all types of liquid - oil, sewage, chemicals, paper pulp, jaggery and liquids of high viscosity.	2. Used for pumping pure liquids and liquids with low viscosity
3. Rotates at higher speeds	3. Moves at a slow speed.
4. Not provided with suction valve and delivery valve.	4. Provided with suction valve and delivery valve.
5. The discharge of liquid is contiuous.	5. The discharge is pulsating.
6. Less maintenance cost.	6. High maintenance cost.
7. Less weight.	7. The weight is relatively high.
8. Occupies less space.	8. Requires more space.
9. Consists of few simple parts.	9. Complicated parts.
10. The efficiency is low.	10. The efficiency is high.

6.6 Rotary pump

The types of rotary pumps are

1. Gear pump
2. Vane pump
3. Lobe pump

6.6.1 Gear pump

In a gear pump, two gears are placed inside a hollow casing in such a way that they rotate in opposite direction. One of these two gears is given rotary motion. The other gear will also rotate meshing with the first one. The shaft on the driving gear will be extending outside to get rotation from a prime mover. A little gap is left between the gears and the casing.

Method of working

The inlet of the pump is immersed in the reservoir. The prime mover actuates the driving gear. This movement makes the other gear also to rotate. As these gears rotate, the liquid is trapped between their teeth and the casing. The liquid is pumped out through the outlet of the pump. *A gear pump is illustrated in Fig. 6.6*

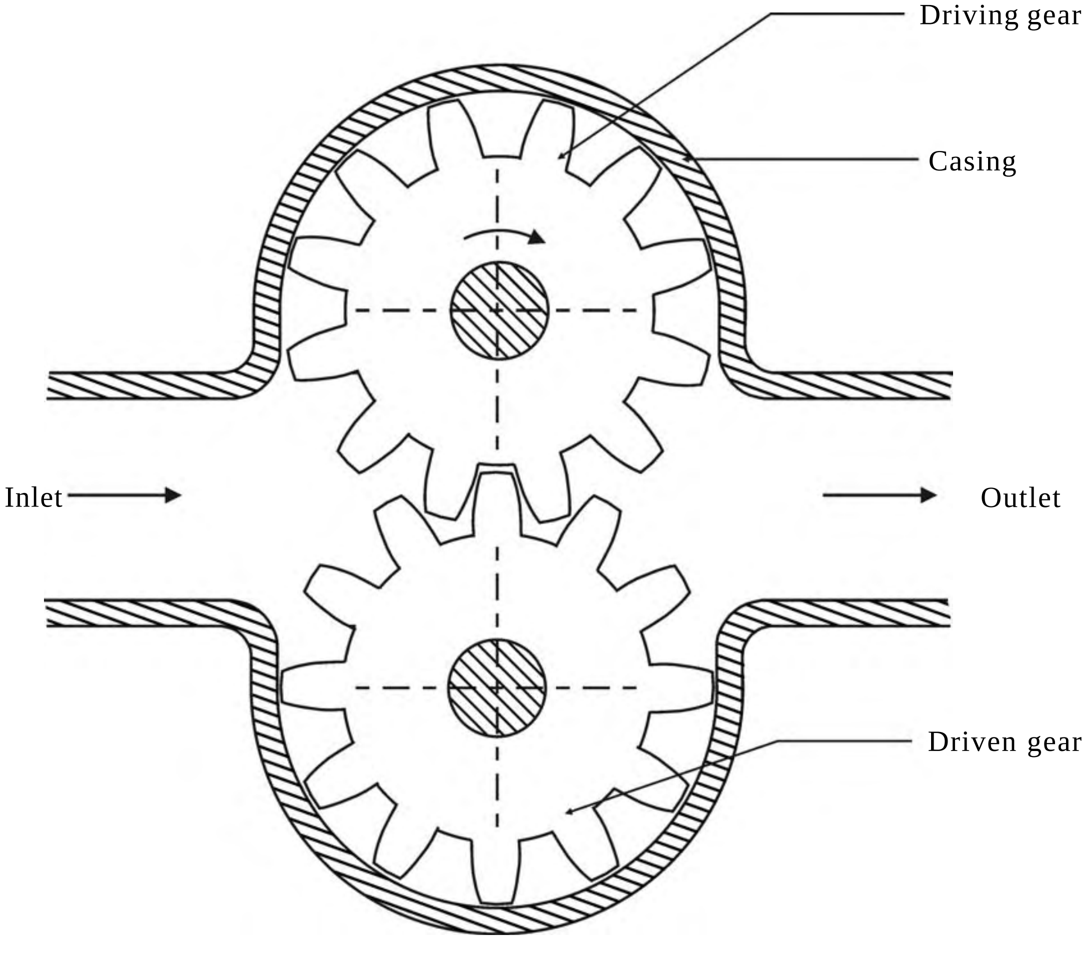

Fig 6.6 Gear pump

Uses

Lubricating oil and liquids with high viscosity are pumped by pumps fitted with spur gears. Pumps with helical gears are useful in pumping water and chemicals. Gear pumps can handle pressures upto 140 k.g/cm^2. The output can be 450 litres per min.

6.6.2 Vane pump

Construction

Vane pumps are equipped with a rotor. Radial slots are present on the rotor. Vanes are attached to these slots and are designed to slide inside them. Rotor is placed inside the casing. The casing and the rotor are placed eccentric. When the rotor is made to rotate, vanes come out of the slots due to centrifugal force. Vanes rotate by touching the inner walls of the casing. In some pumps, vanes are attached to the slots by means of springs to increase the pressure. *A vane pump is illustrated in Fig. 6.7.*

Method of working

The rotor is rotated by a prime mover. The liquid is trapped in between the vanes. The design of the pump is such that the volume of the incoming liquid is increrasing and the volume of the out going liquid is decreasing. So the liquid from the outlet is pumped with increased pressure. Care is taken that the outlet volume of the liquid does not go back to the inlet.

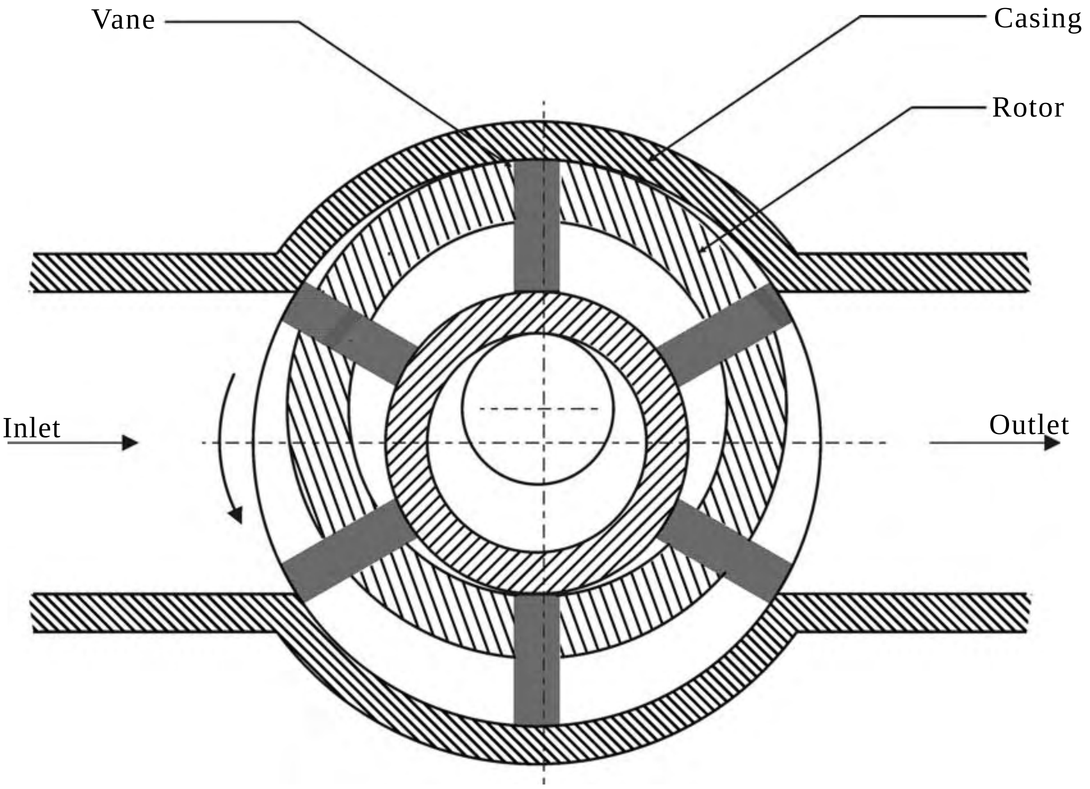

Fig 6.7 Vane pump

A single layer vane pump can handle pressures from 17.5 to 70 k.g/cm^2 and a two layer pump can handle upto 150 k.g/cm^2 of pressure.

6.6.3 Lobe pump

In a lobe pump, two lobes are placed inside a casing and are made to rotate to pump out liquids.

The case of the pump is made of cast iron. Both the lobes get rotational power separately to rotate at same speed. Both the shafts will be extending outside to receive power. The are secured properly in the case with proper packing to avoid leakage of oil.

The pump is provided with an inlet and an outlet. The gap between the lobes and the case is minimum and so the oil is pumped through the gaps from the inlet to the outlet.

A lobe pump is illustrated in Fig. 6.8.

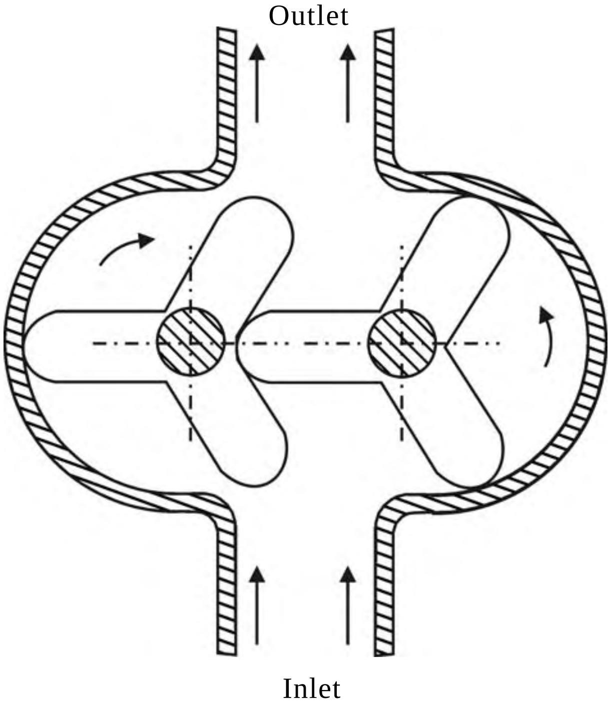

Fig 6.8 Lobe pump

6.6.4 Screw pump

Screws having helical grooves are used in this pump. When the screw starts rotating, the oil is allowed through the helical grooves. The action of the pump is simple and smooth and pumps out the liquid at high speed. They are used mostly in submarines.

6.7 Hydraulic motor

It is a device used to transform hydraulic energy into mechanical energy. Any hydraulic motor can be used as an hydraulic pump. But a few types of pumps only can be used as hydraulic motor.

The capacity of the hydraulic motor depends upon the quantity of the hydraulic energy that it receives and its mechanical efficiency.

Hydraulic gear

The combination of hydraulic pump and hydraulic motor can be called as hydraulic gear. It is equivalent to a gear box in a mechanical drive.

6.7.1 Types of hydraulic motor

The different types of hydraulic motors are

1. Rotary motor
2. Reciprocating motor
3. Constant speed motor
4. Variable speed motor

As in hydraulic pumps, there are different types of hydraulic motors like gear motor, vane motor, radial reciprocating motor, linear reciprocating motor, etc.,

6.7.2 Hydraulic cylinder

A hydraulic cylinder converts hydraulic energy into linear mechanical energy. It is also called as linear actuator. The piston placed inside a cylinder can be made to move to a required distance at a required point of time by the liquid.

In order to maintain perfect alignment between piston and cylinder, a leak proof arrangement of piston ring and packings (cup shaped packing & 'V' shaped packing) are introduced between piston and the cylinder.

Cylinders are used to begin or stop any stroke movement or to clamp an object at a particular position.

There are different types of hydraulic cylinders namely

1. Single acting cylinder
2. Double acting cylinder (with one piston rod)
3. Double acting cylinder (with two piston rods)
4. Ram type cylinder
5. Multi stage cylinder
6. Telescopic cylinder
7. Tandom or combination cylinder

In a single acting cylinder, the hydraulic liquid is allowed to pass through from only one side as shown in the diagram. The piston moves to the other side because of the pressure of the liquid.

On release of the pressure, the piston reaches its original position due to its own weight or by a spring arrangement.

In double acting cylinders, the liquid is allowed from both the ends alternatively. So the system is controlled effectively. There are two types in double acting cylinders - with one piston rod & two piston rods. In the two piston rods double acting cylinder, the speeds on both the directions are equal.

In a ram type cylinder, the piston and the piston rod is replaced by a ram of uniform diameter. They are used in presswork of large capacity. A multi stage cylinder is a device in which several cylinders are placed in linear arrangement.

Telescopic cylinders provide a compact arrangement when the cylinder needs to move by a longer distance. Two or more cylinders are arranged one inside the other and the central cylinder alone is provided with a piston. When objects of high mass are lifted for greater heights, vehicles with fork lifts are used. Such devices are fitted with this type of cylinders.

Fig. 6.9 shows different types of hydraulic cylinders.

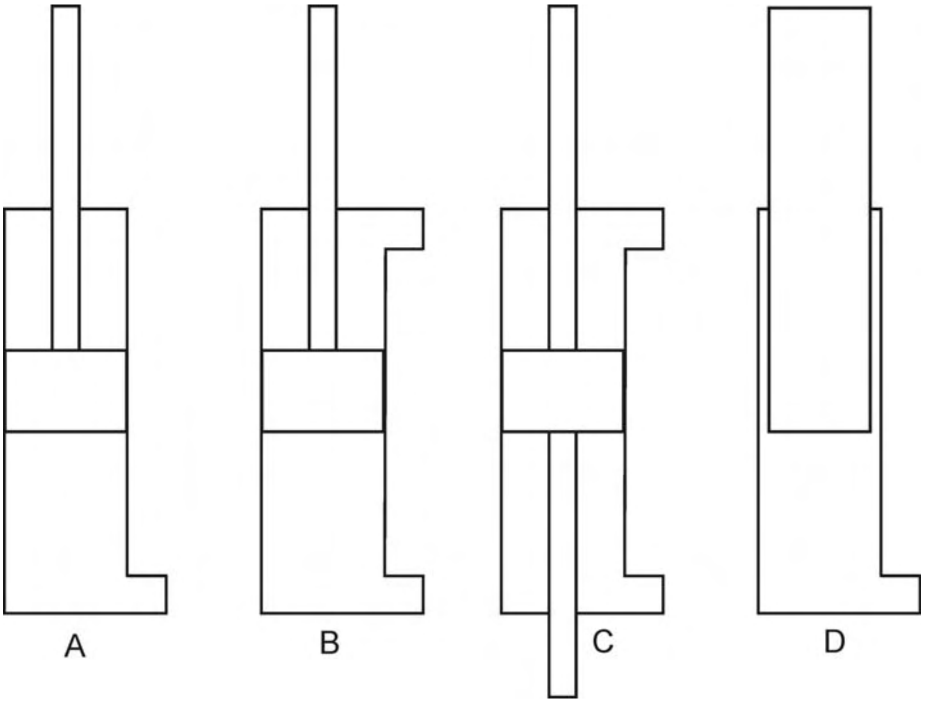

Fig 6.9 Types of cylinders

A - Single acting cylinder

B - Double acting cylinder (with one piston rod)

C - Double acting cylinder (with two piston rods)

D - Ram type cylinder

6.8 Hydraulic valves

The efficiency of a hydraulic circuit depends upon the functioning of various control devices used in the circuit. The control devices refer to the various types of hydraulic valves. As the valves do the task of controlling the hydraulic energy, a hydraulic circuit without valves is useless.

The following are the different types of valves used in hydraulic circuits.

A. Valves used to control the amount of flow in hydraulic circuits

a. Gate valve

b. Globe valve

c. Needle valve

d. Bye pass valve

e. Isolation valve

B. Direction control valves

a. Check valve

i) Swing valve

ii) Poppet valve

iii) Pilot valve

b. Two way plunger valve

c. Three way plunger valve

d. Four way plunger valve

C. Valve used to control the amount of flow in hydraulic equipment

a. Flow control valve (or) Flow regulator

D. Pressure reducing valve

E. Special valves

a. Sequence valve

b. Unloading vale

c. Counterbalance valve

d. Deceleration valve

6.8.1 Gate valve

Hydraulic liquid passes through various pipelines in a circuit. Gate valve is a device useful in opening and closing of the passage for the liquid. A wedge shaped structure is operated by a screw to open or close to control the flow of liquid.

When the passage is fully opened, very little resistance is offered to the flow of the liquid. If the pressure of the liquid in the circuit is high, it is very difficult to operate the valve.

If the passage is opened partially, this valve functions normally. Gate valves are used to cut off the flow of the liquid when maintenance works are carried out in the circuit.

6.8.2 Globe valve

Globe valve is used to open or close the flow of hydraulic liquid in the circuit like a gate valve. A taper hole is present at the centre of the valve. A globe like part fits into the hole. This part is operated to control the passage of the liquid.

This valve is operated even at high pressures. It is highly reliable when it is partially opened. It is not generally used in hydraulic installations due to the fact that it is intended for handling very high quantity of liquid.

6.8.3 Needle valve

The needle valve is similar to a globe valve. The sliding part of the valve looks like a needle. It is suitable to be used in a hydraulic circuit since it is intended for handling smaller quantities of liquid. It is also used where it is not necessary to change the flow very frequently.

6.8.4 Byepass valve

Hydraulic liquid is pumped into the circuit by a pump. At some point of time, a part of the pumped liquid or the whole of it may not be necessary to be passed into the circuit. A byepass valve attached in the circuit to divert such quantity of the liquid back to the reservoir.

6.8.5 Isolation valve

In large hydraulic systems, the circuit may have many sub-circuits. When a repair or maintenance work is to be done at any part of the circuit, the liquid supply to the particular circuit should be stopped. An isolating valve is attached to each of the sub-circuit to cut it off from the main circuit.

Direction control valves (Plunger valves)

Direction control valves are used to allow the hydraulic liquid into various parts of the equipment and to reverse the direction of flow of the liquid. They are also known as Plunger valve, Selector valve or Main valve. Different types of direction control valves are

A. According to the number of ports

a. Uni-directional plunger valve or Check valve

b. Two way plunger valve

c. Three way plunger valve

d. Four way plunger valve

B. According to the state of the valve in neutral position

a. Closed centre main valve

b. Open centre main valve

6.8.6 Uni-directional plunger valve

This valve is useful in allowing the flow of liquid in only one direction. It does not allow the flow in the opposite direction. It is also known as plunger valve, check valve or selector valve. *A puppet type plunger valve is shown in Fig. 6.10.* The valve now is in closed condition. It is connected in line with the circuit.

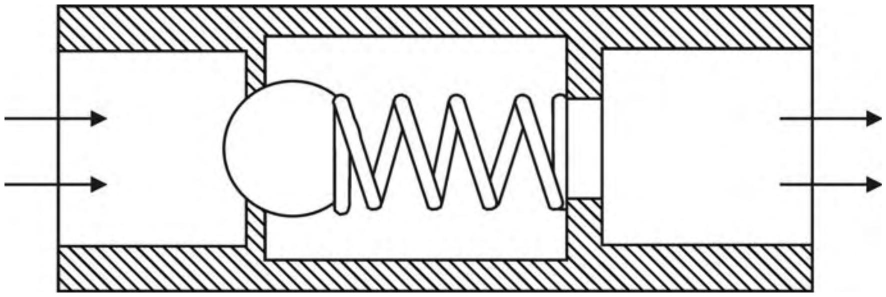

Fig 6.10 Check valve (or) One way plunger valve

6.8.7 Two way plunger valve

In this valve, there are two ports - a. Inlet and b. Outlet. The moving part inside the valve is known as spool or plunger. When the spool is positioned at the right side end, the inlet and outlet are disconnected. If the spool is moved to the opposite side, both the inlet and the outlet are connected and the flow of the liquid is established. An hydraulic device like a hydraulic motor can be switched on or off by this valve. As there is no drain in this valve to send back the liquid to the reservoir, it cannot be used to operate pistons in cylinders. *A two way plunger valve is shown in Fig. 6.11.*

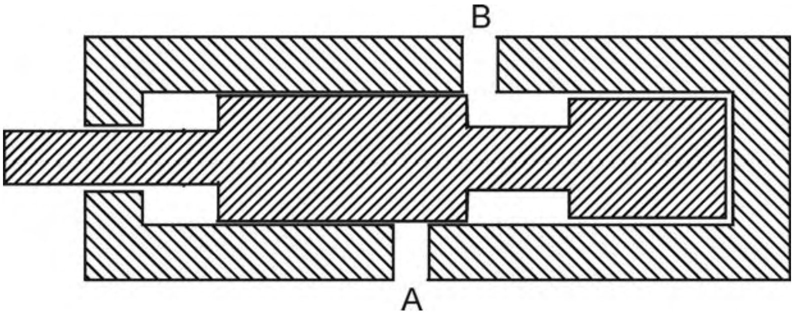

Fig 6.11 Two way plunger valve
A - Inlet B - Outlet

6.8.8 Three way plunger valve

In this valve, there are three ports namely inlet, outlet and drain. *Fig. 6.12 shows a three way plunger valve.* If the plunger is pushed to the right hand end, the inlet A and the outlet B are conneced and the liquid is allowed into the circuit to operate the device. When the plunger is pushed to the opposite end, the inlet A and the drain D are conneced and the liquid is sent back to the reservoir. This type of valve is used to operate hydraulic motors like single acting hydraulic cylinders.

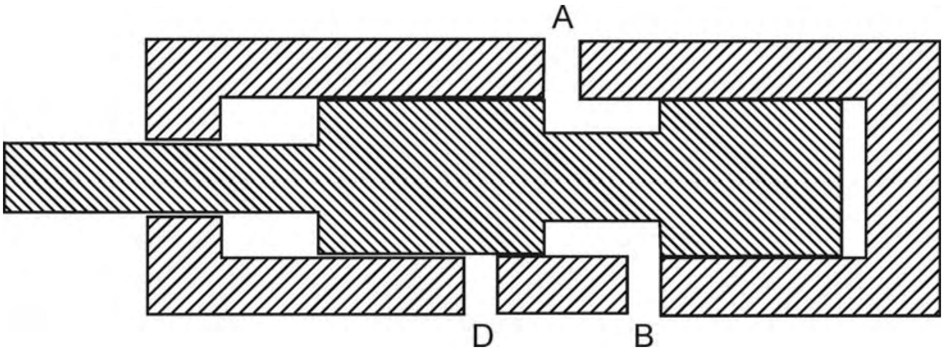

Fig 6.12 Three way plunger valve
A - Inlet B - Outlet D - Drain

6.8.9 Four way plunger valve

There are four ports in this valve - i) Inlet A ii) Outlets B & C and iii) Drain D *as shown Fig. 6.13.* When the plunger is pushed to a side, the inlet A and a outlet B are connected to allow the liquid in a particular direction. In this position, the drain D is connected to the other outlet C. When the position of the plunger is altered, the inlet and the outlet C are connected to allow the liquid in a different direction. Outlet B and drain D are connected now. A four way plunger valve is used to operate a double acting hydraulic cylinder.

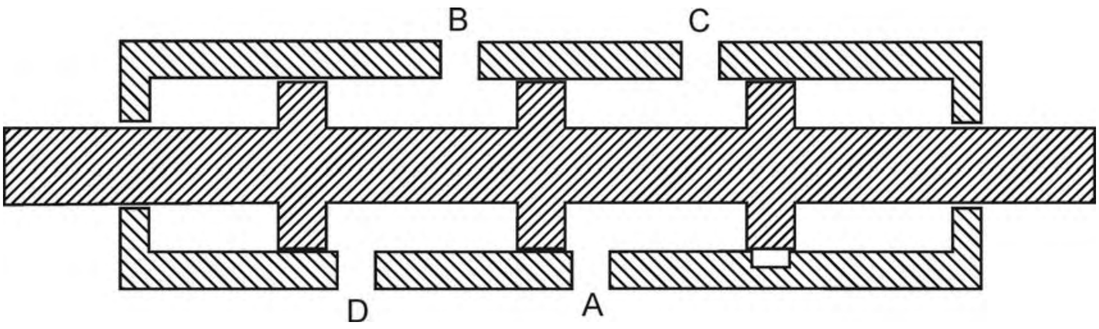

Fig 6.13 Four way plunger valve

A - Inlet B & C - Outlets D - Drain

6.8.10 Hydraulic lock

It is very important to ensure a correct clearance between the plunger and the cylinder in plunger valves. It is difficult to keep a very little clearance between them. But at the same time, more clearance will allow the liquid to pass through the clearance to the other side. When the valves are handling pressures in the range of 140Kg/cm^2, no problems arise. But when pressure range reaches 210Kg/cm^2, the system faces two difficulties.

1. Leakage and 2. Hydraulic lock

The plunger should have correct alignment with the cylinder moving concentrically within it. But while handling higher pressures, the plunger loses the alignment and dash against the walls of the cylinder to get stuck within it. Further movement of the plunger is prevented. This effect is known as hydraulic lock. The lock can be released by reducing the pressure of the system. The clearance between the plunger and the cylinder should be kept minimum preferrably about 0.0025mm by finishing these surfaces by honing or by lapping.

6.8.11 Flow control valve (Flow regulator)

The speed of any hydraulic device (linear or rotary) depends upon the quantity of flow of liquid. If the quantity of liquid pumped by the pump is increased, the speed of the equipment also increases. If the speed of a particular equipment of a circuit is to be changed, the quantity of the liquid is controlled by attaching a flow control valve. It is also known as flow regulator.

6.8.12 Pressure reducing valve

A pressure relief valve is attached to a hydraulic circuit to control the pressure of the liquid within the required limits. But a pressure reducing valve is used in specific sub-circuits to further reduce the pressure in them.

Special valves

6.8.13 Sequence valve

When a series of operations are to be performed in a hydraulic equipment in a specific order, a sequence valve is attached to the circuit. This will operate the devices in the specific order. It is used in machines where production work is carried out.

For example, a work has to be held firmly before any machining is carried out on it. The second operation cannot be done before the first is performed. So, a sequence valve is very important in executing the operations in a specific sequence.

6.8.14 Unloading valve

This valve is used where it is necessary to provide the equipment with different speeds one by one. The different speeds shall be used alternately as in the case of a hydraulic shaper.

6.8.15 Deceleration valve

The speed of a hydraulic actuator is made to get slower on reaching a specific point. The first phase moves at relatively faster speed. The valve used to reduce the speed at a particular point is known as deceleration valve.

6.9 Hydraulic circuit for a shaping machine

The important elements of a hydraulic shaper are

1. Constant discharge hydraulic pump
2. Pressure relief valve
3. Four way control valve
4. Cylinder with piston

Hydraulic liquid is pumped by a constant discharge pump into the direction control valve. It has four ports and three stages. If the pressure goes beyond desired limits, the same is released by the pressure relief valve.

The liquid reaches the right side of the cylinder through the inlet E and outlet A of the valve. Due to the pressure of the liquid, the piston moves towards left. The toolhead moves forward to perform the forward cutting stroke. The liquid on the left side of the piston is sent back to the reservoir through B and P.

Due to the change of position of plunger inside the valve, the liquid reaches the left side of the cylinder through the inlet E and outlet B. Piston moves towards right. The toolhead

moves in the opposite direction and this movement is known as the return stroke. The liquid on the right side of the piston is sent back to the reservoir through A and P.

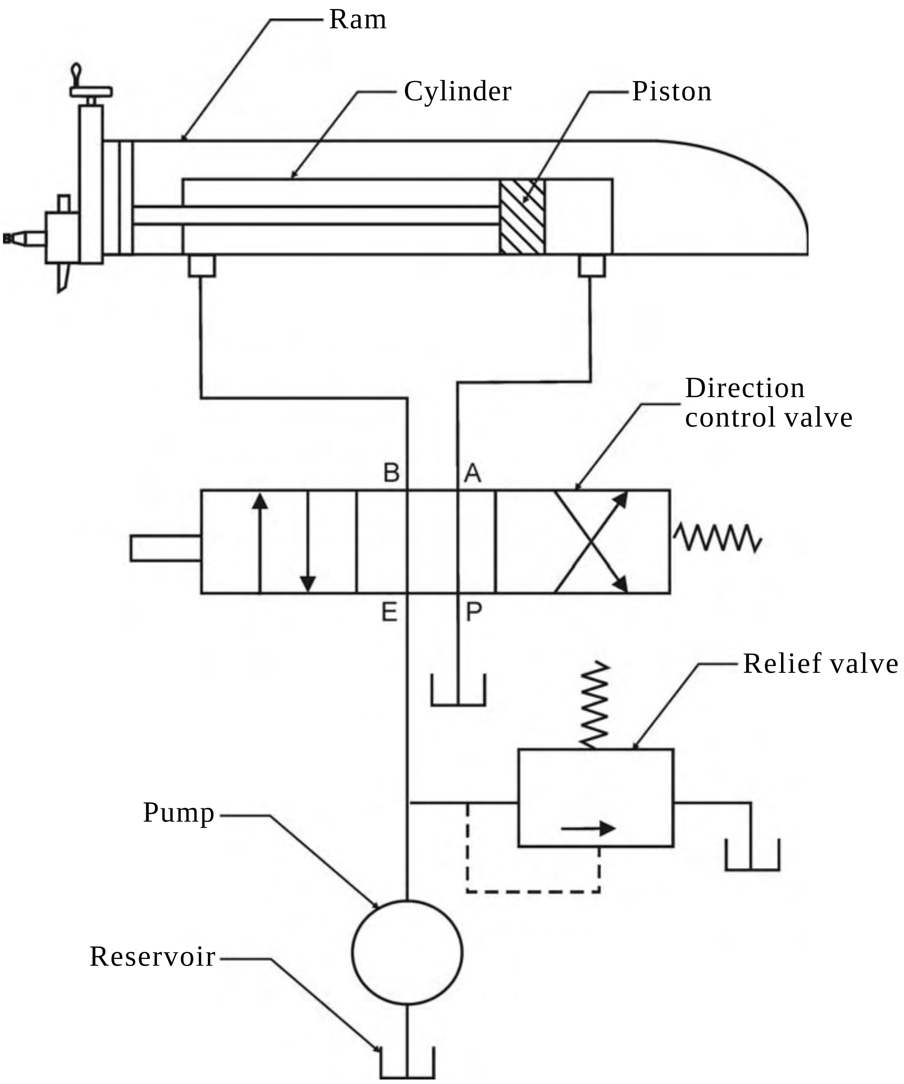

Fig 6.14 Hydraulic circuit of a shaping machine

Quick return of the ram

Due to the change of stroke volume of the cylinder during forward and return stroke, the piston returns at a faster rate.

The stroke volume of the cylinder during return stroke is comparitively smaller than during forward stroke due to the presence of the piston rod. So, the pressure increases automatically to push the piston and the toolhead at a faster speed during return stroke.

6.10 Hydraulic symbols

Sl.No	Description	Symbol
1.	Liquid flow line	
2.	Drain line	
3.	Line crossing	
4.	Line joining	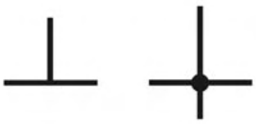
5.	Flexible line	
6.	Direction of flow	
7.	Line to reservoir - above liquid	
8.	Line to reservoir - below liquid	
9.	Fixed displacement pump	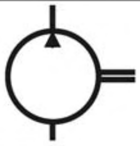
10.	Variable displacement pump	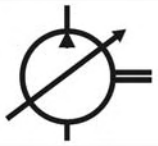

6.10 Hydraulic symbols (contd.)

Sl.No	Description	Symbol
11.	Electric motor	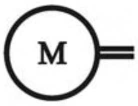
12.	Open valve	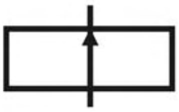
13.	Closed valve	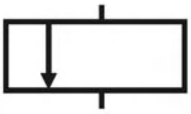
14.	Check valve	
15.	Pressure reducing valve	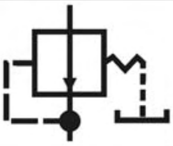
16.	Pressure gauge	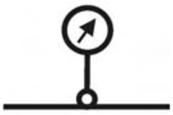
17.	Filter	
18.	Single acting cylinder	
19.	Double acting cylinder- 1 piston rod	
20.	Double acting cylinder- 2 piston rods	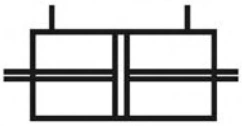

QUESTIONS

I A. Choose the correct option

1. The pressure obtained by a gear pump is

   a. 180 $k.g/cm^2$ b. 140 $k.g/cm^2$
   c. 170 $k.g/cm^2$ d. 150 $k.g/cm^2$

2. A centrifugal pump is classified according to the type of casing as

   a. Low lift pump b. Closed impeller pump
   c. Mixed flow type d. Diffuser casing pump

3. Impeller is a part found in a

   a. reciprocating pump b. gear pump
   c. centrifugal pump d. vane pump

4. A cylinder used in lifting of objects of high mass is

   a. single acting cylinder b. double acting cylinder
   c. telescopic cylinder d. combination cylinder

I.B. Answer the following questions in one or two words

1. How are hydraulic pumps classified according to the volume of the outlet?
2. Mention one property of a positive displacement pump.
3. Which type of pump is a vane pump?
4. Mention a type of a special valve.
5. What do you know about the suction head of a centrifugal pump?
6. Which type of a pump has a connecting rod?
7. How is a hydraulic cylinder otherwise known as?

II. Answer the following questions in one or two sentences.

1. What is hydraulics?
2. Define a hydraulic pump.?
3. What is the principle of a hydraulic pump?
4. Mention the types of hydraulic pumps.
5. What is a hydraulic motor?
6. What are the important parts of a centrifugal pump?
7. What are the uses of a reciprocating pump?
8. What is a hydraulic cylinder?

9. What are the uses of a hydraulic cylinder?
10. What are the valves used to control the flow of hydraulic liquid?

III .Answer the following questions in about a page

1. List out the differences between a centrifugal pump and a reciprocating pump.
2. Explain the parts of a centrifugal pump with a diagram.
3. Explain the parts of a reciprocating pump with a diagram.
4. Explain a lobe pump with a diagram.
5. Draw the circuit of a hydraulic shaper and label its parts.

7. ELECTRICAL EQUIPMENTS

7.1 Introduction

Electricity is a form of energy. It occupies an important place in our daily activities – in life and business. One cannot see electricity but can feel the effects of it. One should not have a direct contact with it as it may cause damages.

Electricity is being used for everything - from providing light and other facilities to our household to latest space research. The contributions made by American scientists like Benjamin Franklin, Thomas Alwa Edison and Michael Faraday of England are immeasurable.

7.2 Motor

A motor is a device used to convert electrical energy into mechanical energy. Different types of motors are used according to their usage and the place in which they are used.

7.2.1 Types of motors

1) D.C. Motor

2) A.C. Motor

- i) Three phase induction motor
  - a) Squirrel cage induction motor
  - b) Slip ring induction motor
- ii) Single phase induction motor
  - a) Split phase induction motor
  - b) Capacitor induction motor
  - c) Repulsion motor
  - d) Shaded pole motor

7.2.2 Three phase induction motors - the principle of working

When a three phase supply is supplied to three phase windings placed 120° apart inside the stator of an induction motor, a constant rotating magnetic field is induced.

It induces e.m.f in the conductors of the rotor known as armature. According to Lens' law, we know that when an e.m.f. is induced in a circuit electromagnetically, the current set up always opposes the motion or change in the current which produces it.

7.3 Construction of a induction motor

The main parts of a induction motor are

1. Stator   2. Rotor

7.3.1 Stator

It is made of thin sheets arranged as tube. The laminated core has slots cut longitudinally on it parallel to the axis. It is wound for two, four, six poles depending on the required speed.

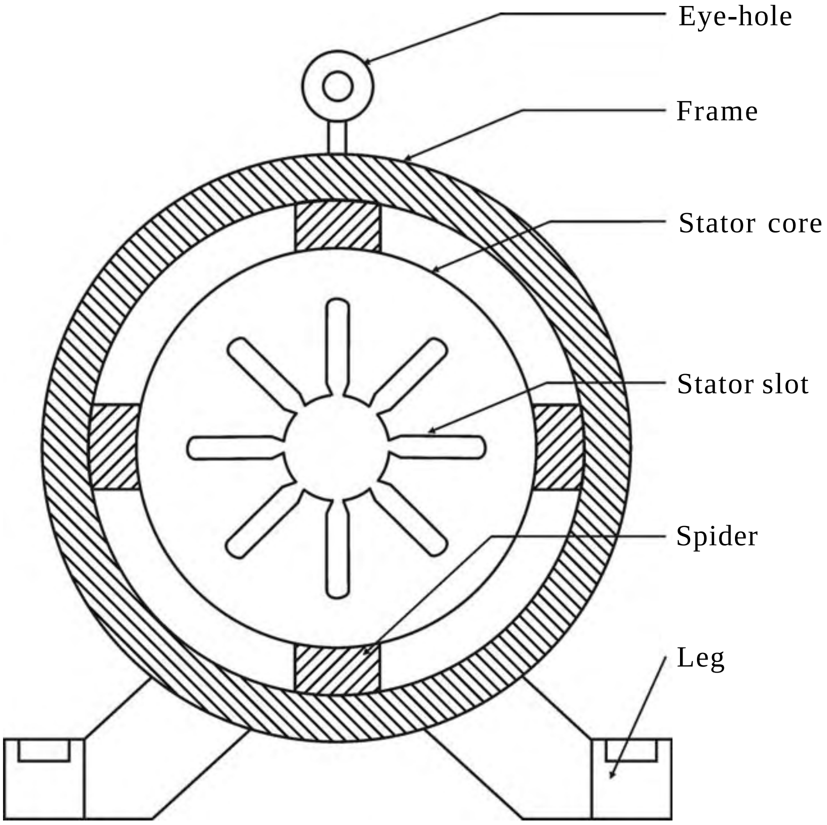

Fig 7.1 Stator

7.3.2 Rotor

Based on the construction of the rotor, the three phase induction motor can be classified as

1. Squirrel cage induction motor
2. Slip ring induction motor

7.3.3 Construction of a squirrel cage induction motor

The rotor of a squirrel cage motor is made of cylindrical laminated core with small openings. These openings receive insulated conductors. The openings are formed parallel to the axis. So, the motor starts to run with a uniform rotating torque. Humming is reduced to a great extent. One bar is placed in each slot and all the bars are short circuited by two end rings. This makes a complete squirrel cage rotor.

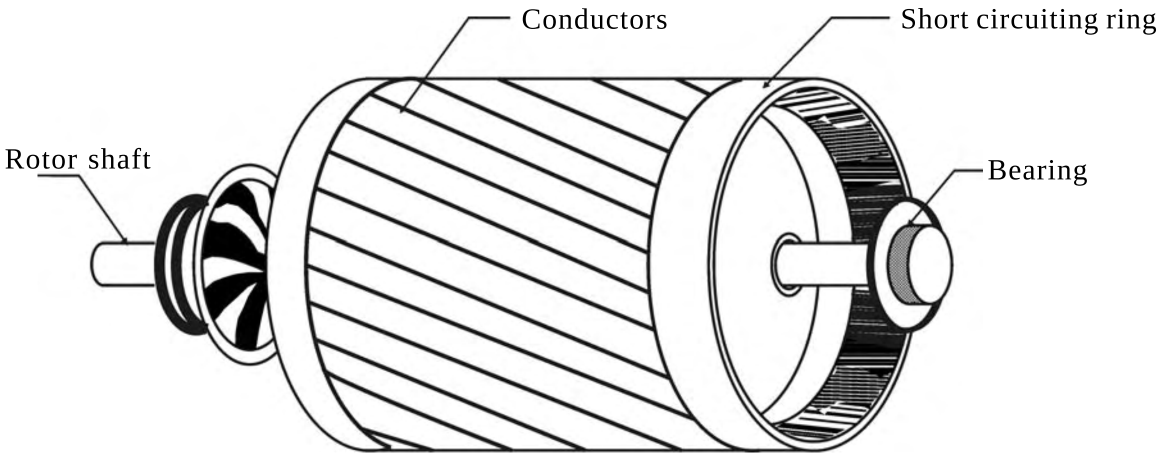

Fig 7.2 Rotor of squirrel cage induction motor

There are two types of squirrel cage induction rotors

1. Single squirrel cage induction rotors - It has only one winding in the rotor.
2. Double squirrel cage induction rotors - It has two windings in the rotor.

7.3.4 Construction of a slip ring induction motor

The rotor of the slip ring motor is actually wound for three phase windings connected in star formation. These windings are placed in insulated rotor slots and the ends are brought out and connected to the three slip rings mounted on the shaft. Brushes mounted on the slip rings connect the rotor windings to external resistance for the purpose of starting.

This motor is started with full additional resistance in the rotor circuit to ensure less starting current and more starting torque. The external resistance is reduced gradually and the required speed is obtained by short-circuiting the three slip rings. The rotor winding will have the same number of poles found in the stator. This motor is also known as wound rotor induction motor.

7.3.5 Differences between a squirrel cage induction motor and a slip-ring induction motor.

Squirrel cage induction motor	Slip ring induction motor
1. Simple in construction	1. Construction is complicated because rotor is also wound with insulated wire
2. Low cost	2. The cost is high
3. Operates at high efficiency	3. Efficiency is not high
4. There is no chance of sparks and hence it is explosion proof	4. Sparking risk is there because of slip-rings and the brushes riding on them
5. Requires the least maintenance	5. Maintenance is troublesome
6. Starting arrangements are simple	6. Requires costly starters
7. Starting torque is less	7. High starting torque
8. Speed control is not easily possible	8. Speed can be changd earily

7.4 A.C single phase capacitor start motor

The stator of a A.C single phase capacitor start motor has two windings - running winding & starting winding. A capacitor and a centrifugal switch are connected in series with the starting winding. A squirrel cage rotor is fitted in this motor. Capacitor creates 90° phase difference between the two windings.

Single phase current is supplied and the development of rotating magnetic field makes the rotor to rotate. When the rotor attains 70% of the total speed, the centrifugal switch disconnects the starting winding. This motor has high starting torque. The direction of rotation can be changed by just changing the connection of terminals of any one of the windings. The motors find extensive use in wet grinders, small grinding machines, drilling machines, compressor motors used for air -conditioners and refrigerators.

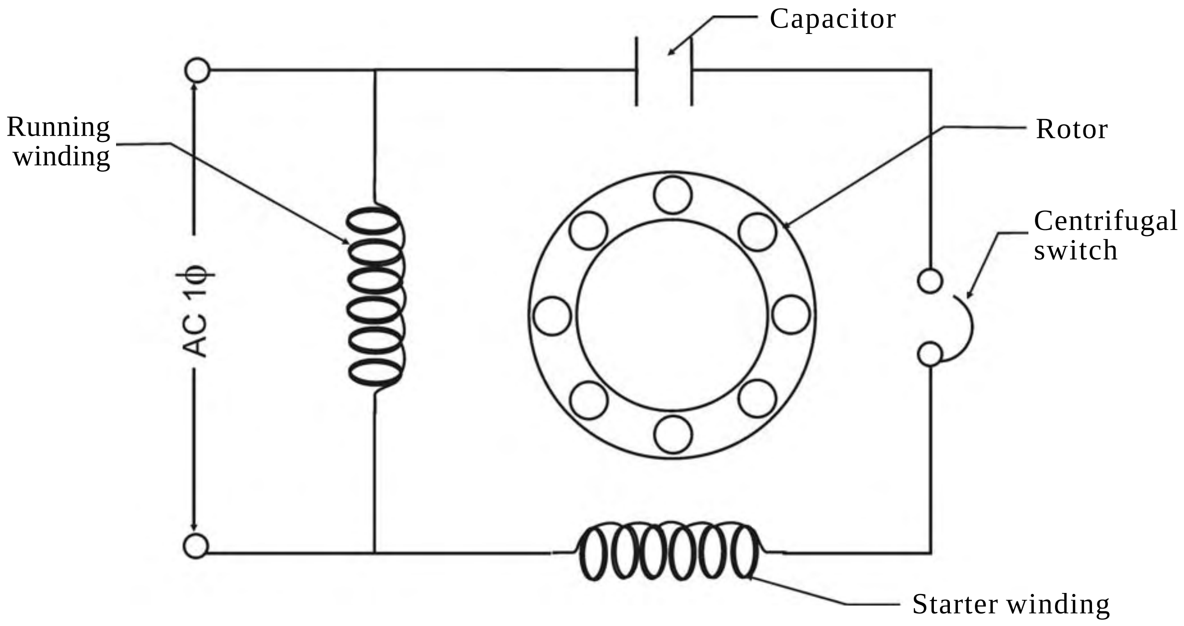

Fig 7.3 A.C. Single phase capacitor start motor

7.5 Starters for induction motors

7.5.1 Need of starters

When induction motors are directly switched on to supply, it takes about five to six times of full load current. This initial excessive current causes damages to the motor and supply wires. Starters are used to limit the inrush of starting line current and full current is supplied when the motor picks up speed. It consists of protective elements like no volt coil and over load relays.

7.5.2 Different types of starters for induction motors

There are different types of starters used for induction motor.

i) Direct – on – line starter (D.O.L Starter)

ii) Star – delta starter

iii) Auto transformer starter

iv) Rotor resistance starter (for slip ring motor)

7.5.3 Direct - on - line (D-O-L) starter

It is simple in construction when compared with other starters. It permits the motor to startup with full voltage on. It has protective elements to safeguard the motors against over loading and single phasing. Single-phasing means operation of motor with one line cut of accidentally. When the start button is pressed, the no volt coil circuit energises. The contacts are pressed against spring tension to connect the motor terminals to three-phase supply. The motor starts running.

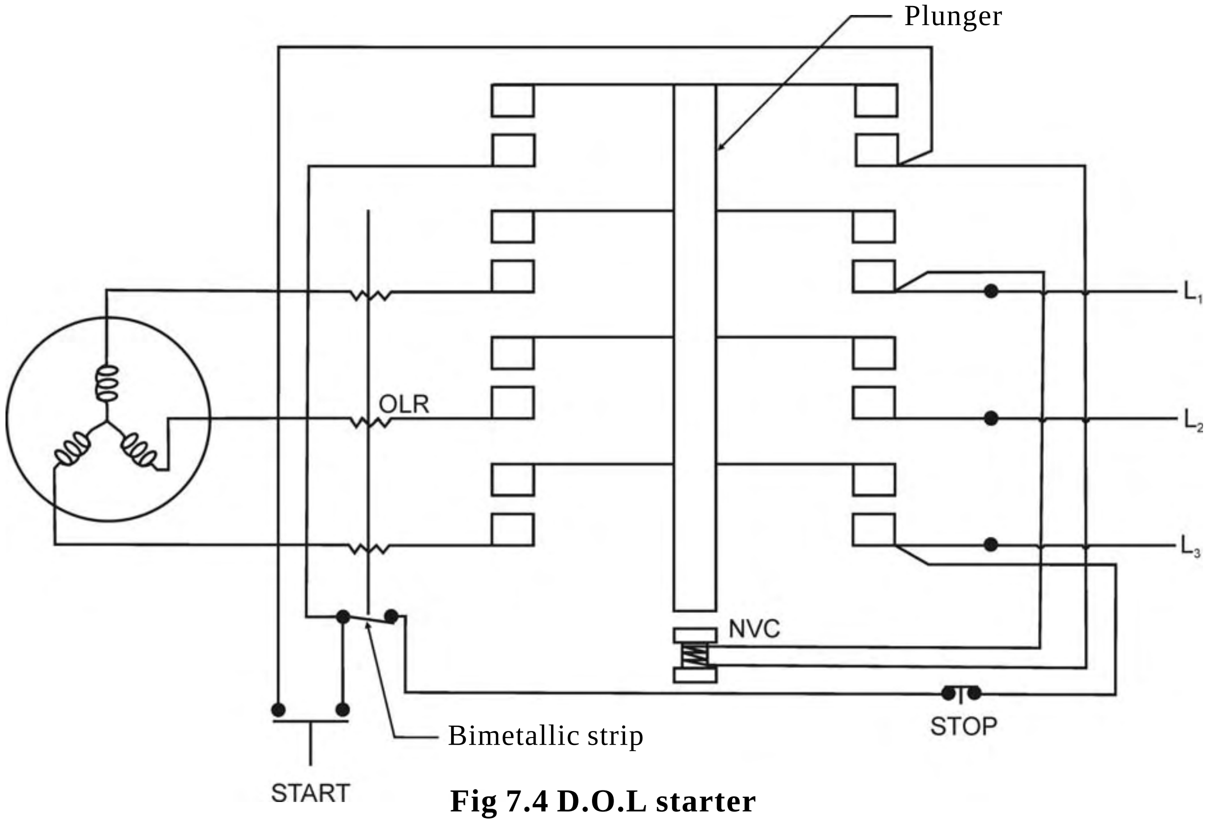

Fig 7.4 D.O.L starter

Even if the pressing of ‘start’ button is stopped, the circuit is closed through the fourth conductor and the motor continues to run. When the motor is overloaded, the temperature of the heating elements becomes high to heat the bimetallic strip. This makes over load relay (OLR) to press a lever to open the no volt coil for a moment to switch off the supply to stop the motor.

If the OFF button is pressed, the supply to the No volt coil is disconnected and the motor is stopped. Direct-on-line starters are used for motors with capacity upto 5 hp.

7.5.4 Star – delta starter

This starter has two positions – ‘start’ and ‘run’. When the handle is pressed to ‘start’, the three motor windings are connected in star formation. Each phase winding gets only 58% of the line voltage. So the starting line current to the motor is reduced. As the motor picks up speed and attains nearly 80% of normal r.p.m., the starter handle is pushed to ‘run’ position. In this run position, the three winding get connected in delta formation so that each winding gets full supply voltage and full line current.

This starter is provided with usual protective devices such as overload relay, no volt release and single phase preventer. Star-delta starter is used for motors of capacity 5 hp to 15 hp.

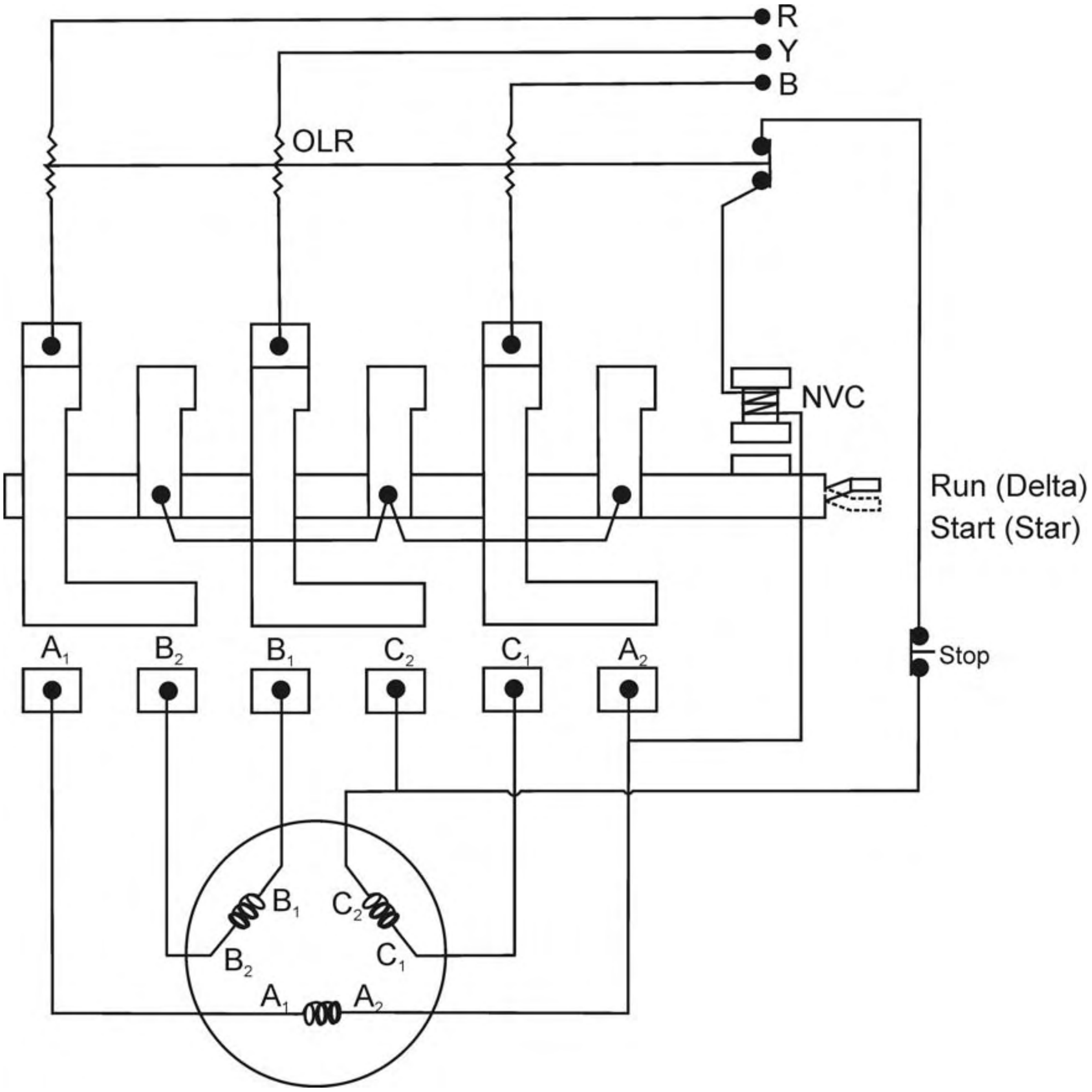

Fig 7.5 Star - Delta starter

7.5.5 Auto transformer starter

An auto transformer is fitted in this starter and so it is costlier. Star connected transformers with 40, 60 and 80% tapings, allows specific voltage to be pressed against the motor windings.

When the starter handle is thrown to start position-reduced voltage is supplied to the motor windings and the motor starts with reduced line current and reduced torque. When the starter handle is pushed to run position, full line voltage is applied to motor windings and the auto transformer is isolated from the circuit. This starter is provided with usual protective devices such as overload relay and no volt coil. This type of starter is intended for starting three phase induction motors of capacity more than 15 hp.

7.5.6 Rotor resistance starter

Slip ring motors are always started with a resistance in series with each rotor phase. In this starter, full line voltage is applied across starter windings. Full value additional resistance is added in series with each phase of the rotor windings. These resistances are immersed in oil. As the rotor starts up, the handle is rotated slowly until the entire resistance is out. The motor then runs normally. At this stage, rotor windings are short-circuited eliminating the resistance. Now the motor runs like a squirrel cage motor

QUESTIONS

I. A Choose the correct option

1. The device used to converet electrical energy into mechanical energy is
   a. generator b. electric motor c. starter d. transformer
2. Starter used for motors of capacity upto 5 hp is
   a. star – delta starter b. Direct – on – line starter
   c. auto transformer starter d. rotor resistance starter
3. The safety device used to protect the motor from over load or single phasing is
   a. no volt coil b. over load relay c. contactor d. capacitor

I. B Answer the following questions in one or two words

1. Expand - D.O.L starter.
2. Name the windings present in the A.C. single phase capacitor start motor.
3. Expand - A.C.

II. Answer the following questions in one or two sentences

1. List out the types electrical motors.
2. What are the types of starters used in induction motors?
3. What are the safety devices fitted in starters to protect the induction motors?
4. What is the need of a starter in a motor?

III. Answer the following questions in about a page

1. Differenciate a squirrel cage induction motor from a slip ring induction motor.
2. Draw and explain a D.O.L starter.
3. Draw a neat diagram of a star - delta starter and explain.
4. Draw and explain a A.C. single phase capacitor start motor.

8. WELDING

8.1 Introduction

Welding can be defined as the process of joining two metal parts by applying heat . In industry, welding process is primarily used for fabricating works.

Welding is useful in making permanent joints. It can be performed by applying or not applying pressure. The contours of the metal parts are molten to make the joint in some methods. In some types of welding processes, filler metal is used. In some other methods, filler metal is not used.

The process of welding finds application in manufacturing automobiles, aeroplanes, rail coaches, machine components, metal structures, boilers and ships. Generally, welding process is applied wherever metal works are performed.

8.2 Methods of welding

There are two methods by which welding is performed

1. Plastic welding
2. Fusion welding

8.2.1 Plastic welding

In this method, the metal parts are heated to plastic state. At this stage, pressure is applied to make a perfect joint. It is also known as pressure welding.

8.2.2 Fusion welding

The metal parts are heated upto the point of melting in this method. The joint is made at this stage and the parts are allowed to cool. On cooling, the molten metal forms a solid joint. No pressure is applied in this method. Hence, it is also known as prersure less welding. Arc welding and gas welding fall in this category.

8.3 Classification of welding processes

1. Arc welding
    - a. Carbon arc welding
    - b. Metal inert gas welding
    - c. Tungsten inert gas welding
    - d. Atomic hydrogen welding
    - e. Plasma arc welding
    - f. Submerged arc welding
    - g. Electro slag welding
2. Gas welding
    - a. Oxy-acetylene welding
    - b. Air-acetylene welding
    - c. Oxy hydrogen welding
3. Resistance welding
    - a. Butt welding
    - b. Spot welding
    - c. Seam welding
    - d. Projection welding
    - e. Percussion welding
4. Thermit welding
5. Solid state welding
    - a. Friction welding
    - b. Explosive welding
    - c. Ultrasonic welding
    - d. Diffusion welding
6. Newer welding
    - a. Electron beam welding
    - b. Laser welding
7. Welding related processes
    - a. Oxy-acetylene cutting
    - b. Arc cutting
    - c. Hard facing
    - d. Brazing
    - e. Soldering

8.4 Arc welding

In arc welding, the edges of two metal parts are melted by an electric arc and the joint is made. An electrode made of a suitable metal is utilised for this purpose. The electrode is taken closer to the parts to be joined and electric current is supplied to both the parts and the electrode. An electric arc is made between the electrode and the metal parts. This arc generates high temperature and melts the metal parts. The parts are joined at this molten state. The filler metal in the form of electrode is deposited along the joint. The metal parts are joined without the application of any pressure. Electrical energy is coverted into heat energy in arc welding.

The distance between the metal parts and the eleclrode should be around 3mm. The heat generated during arc welding ranges from 5000°C to 6000°C. A generator or a transformer supplies the required current to both the electrode and the metal parts. The electrodes are flux coated to prevent the molten metal from reacting with the atmosphere.

Fig. 8.1 shows arc welding operation.

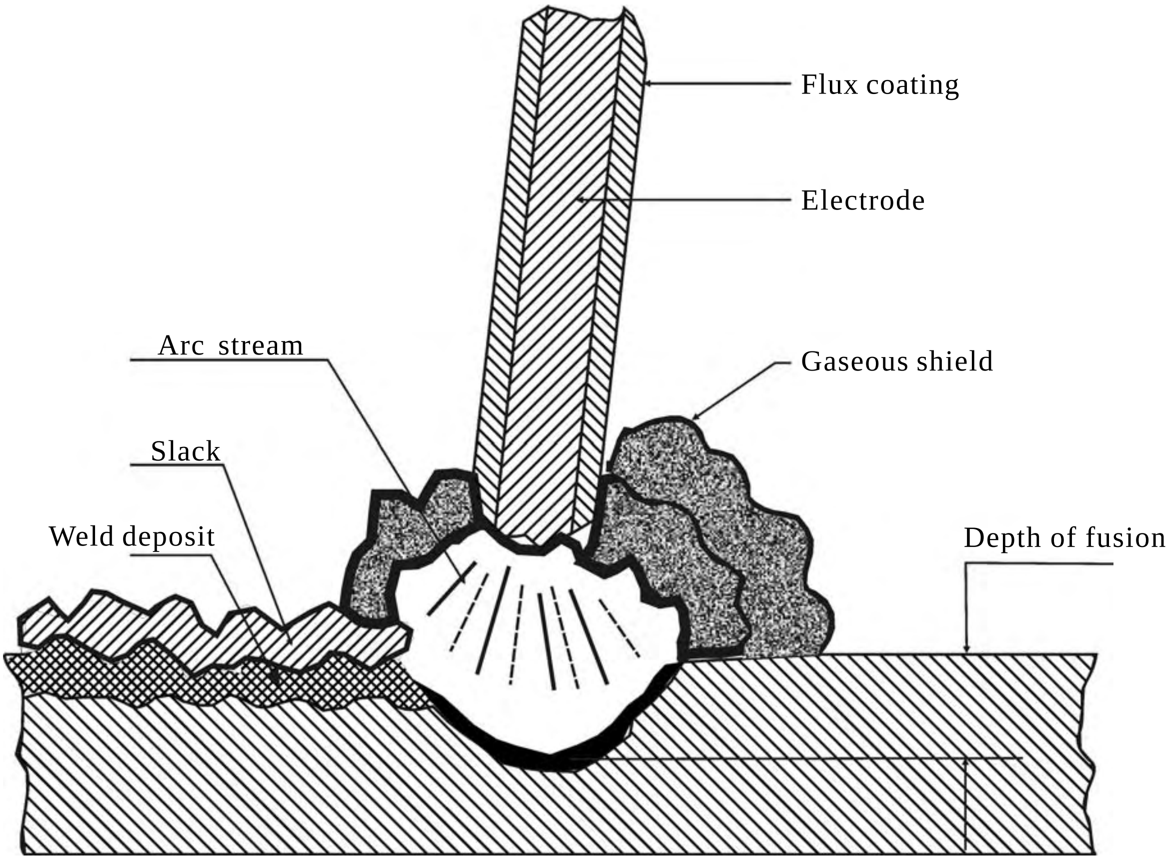

Fig 8.1 Arc welding

8.5 Arc welding equipments

The following equipments are used for the process of arc welding

1. D.C welding generator (or) AC transformer
2. Cables
    a. Electrode cable
    b. Work cable
3. Electrode holder
4. Electrode
5. Gloves
6. Protective shield (or) Goggles
7. Apron for the operator
8. Wire brush
9. Chipping hammer

A typical arc welding circuit is shown in Fig. 8.2

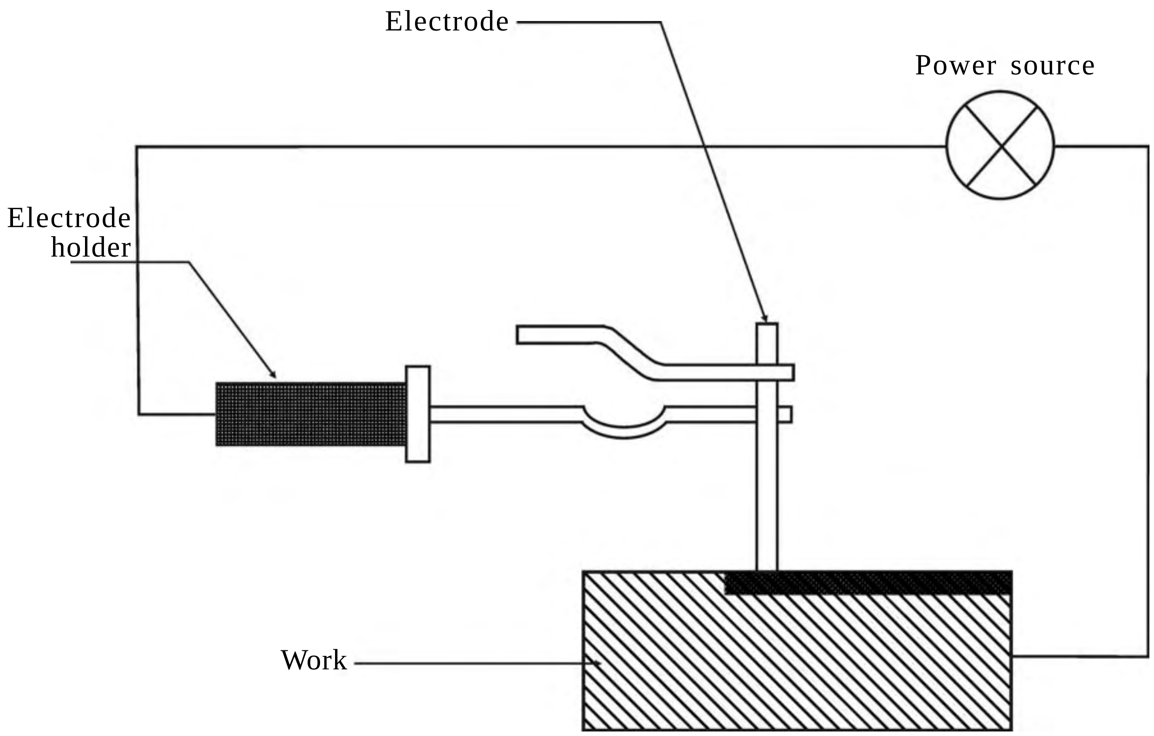

Fig 8.2 Arc welding circuit

8.5.1 Differences between DC welding generator and AC welding transformer

DC welding generator	AC welding fransformer
1. Low efficiency	1. The efficiency is high
2. High power cost	2. The cost for the power is low
3. The cost of the machine (equipment) is high	3. Low machine cost
4. Runs on low voltage	4. High voltage is necessary
5. Safe equipment	5. The chances of accidents is high
6. Uncoated electrodes may be used	6. Only flux coated electrodes are used
7. Joints are made with ferrous and non-ferrous metal parts	7. Non-ferrous metal parts cannot be joined
8. Work is connected to the positive terminal (+) and the electrode is connected to the negative terminal (-)	8. No restriction in the direction of power supply connection
9. Noisy functioning	9. No noise during operation
10. Easy maintenance of equipments	10. Requires proper maintenance
11. The cost of the process is low	11. High process cost
12. Thin metal parts can easily be welded	12. Difficult to weld thin parts

8.5.2 Specification of electrodes

Generally, the size of the electrodes is specified by the length and its diameter. They are available to a maximum of 12 mm diameter and 450 mm length. The size of the electrode increases with the current used. In manual welding, the size of the electrode changes according to the thickness of the metal parts. Spring like electrodes are used in automatic welding.

8.5.3 Types of electrodes

The electrodes used in arc welding are of two types

1. Consumable electrode
2. Non-consumable electrode

There are three types of consumable electrodes. They are

1. Bare electrodes
2. Lightly coated electrodes
3. Heavily coated electrodes

Non-consumable electrodes are used in the processes of atomic hydrogen welding and TIG welding.

8.5.4 Selection of electrodes

The material used for manufacturing electrodes depends upon the material to be welded. Given is the list indicating suitable materials for manufacturing electrodes for welding different metals.

Sl. No.	Material to be welded	Electrode material
1.	Wrought iron	Low carbon steel
2.	Mild steel	Mild steel with copper coating
3.	Alloy steel	Nickel steel
4.	Cast iron	Cast iron
5.	Aluminium	Cast aluminium alloy
6.	Carbon steel	Steel wire(0.15% carbon & 0.025% Phosperous
7.	Copper	Copper
8.	Brass	Brass

8.6 Carbon arc welding

In carbon arc welding, the process of welding is carried out by an electric arc. The arc formed between the electrode and the workpiece generates high amount of heat. In D.C. electric supply, the carbon electrode is connected to the negative terminal and the positive terminal is connected to the workpiece. During the formation of the electric arc, the temperature of the positive terminal is 4000°C and the negative terminal will be around 3000°C. Carbon, the electrode material will not fuse with the workpiece materials. This prevents the joint from becoming weak. A lengthy arc produces Carbon-monoxide at the location of welding and prevents the molten metal from reacting with the atmospheric air. *Fig. 8.3 illustrates the process of carbon arc welding.*

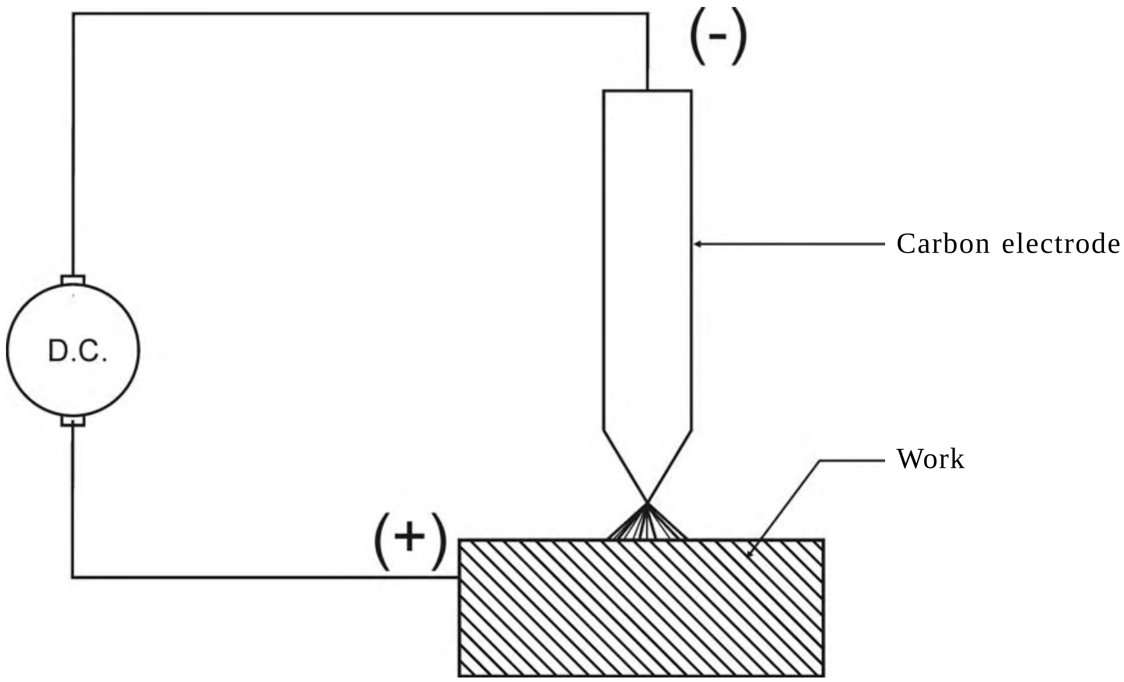

Fig 8.3 Carbon arc welding

Both ferrous and non-ferrous metals can be welded by this method. Steel sheets, copper and its alloys, brass and aluminium parts are welded using carbon arc welding. This method of welding can also be done automatically. Starting of the electric arc is easy and the temperature is controlled easily. The disadvantage of this method is the presence of blow holes in the joint.

8.7 Gas welding

Gas welding is the process of melting and joining metal parts by means of a gas flame. Generally pressure is not applied during the process of gas welding. Oxygen and acetylene gases are made to pass through the welding torch. These gases are mixed at the required ratio at the torch and the tip of the welding torch is ignited to produce the flame. Because of the heat generated by the flame, the edges of the metal parts are melted. Filler rod provides the additional metal required for making the joint. The flux coated on the electrodes prevents oxidation and removes impurities. This method is suitable in welding metal parts of thickness varying from 2mm to 50 mm. The temperature of the flame is around 3200°C.

8.8 Gas welding equipments

The following equipments are necessary for gas welding

1. Gas cylinders
2. Regulators

3. Pressure gauges
4. Rubber hoses
5. Welding torch
6. Safety goggles
7. Gloves
8. Spark lighter
9. Wire brush

8.8.1 Gas cylinders

Oxygen and acetylene gases are stored in separate cylinders and used for gas welding. The colour of oxygen cylinder is black and the acetylene gas is stored in maroon cylinders. Oxygen is stored at a pressure of 125Kg/cm^2. Acetylene gas is stored at a pressure of 16 Kg/cm^2. in the cylinder.

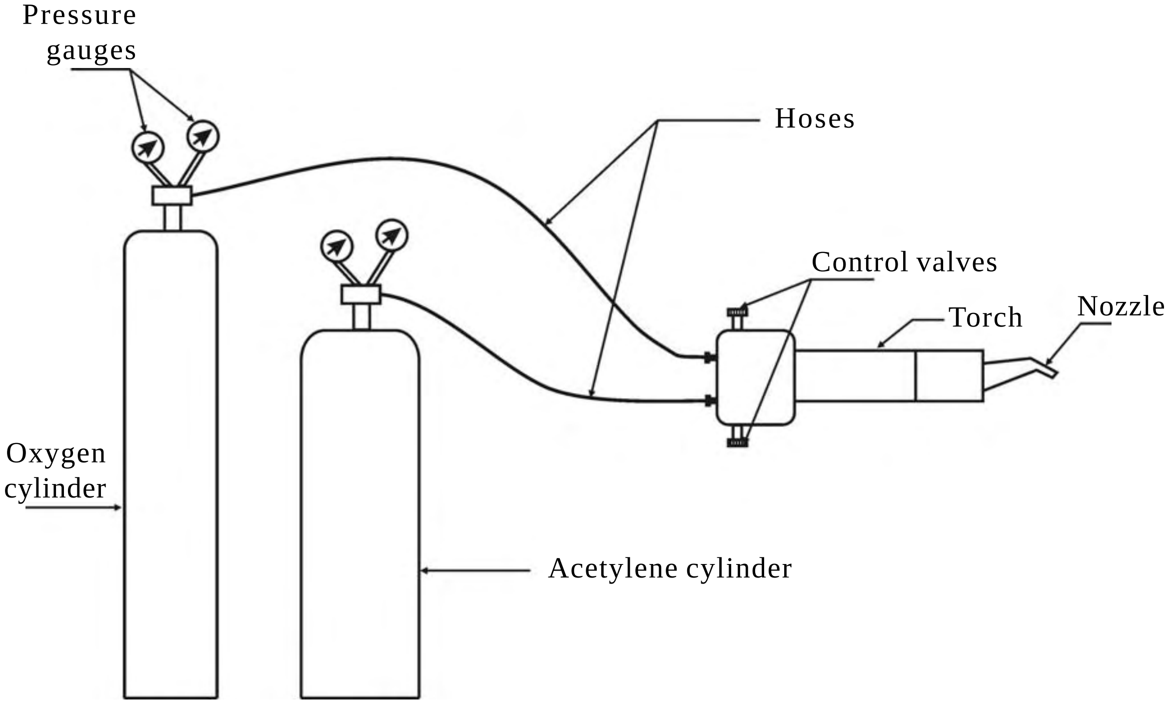

Fig 8.4 Gas welding

8.8.2 Regulators

Separate regulators are fitted on both the cylinders. A regulator is used to control the working pressure of the gases. The working pressures of oxygen is 1Kg/cm^2 and acetylene is 0.15Kg/cm^2. Working pressure of these gases are altered according to the thickness of the metal parts of the joint.

8.8.3 Pressure gauges

Two pressure gauges are fitted each on the oxygen cylinder and on the acetylene cylinder. One of the pressure gauges indicates the pressure of the cylinder and the other gauge indicates the working pressure of the specific gas.

8.8.4 Hoses

Separate hoses are used to connect the two cylinders with the welding torch through regulators. The colour of the hose from the oxygen cylinder is black and the one from the acetylene cylinder is red. These hoses carry the gases to the welding torch.

Gas welding kit is shown in Fig. 8.4

8.8.5 Welding torch

Oxygen and acetylene reach the welding torch through the passages of hoses from the respective cylinders. These gases are mixed in the mixing chamber of the welding torch. Flame is produced at the tip of the torch when the gases are ignited. There are two control valves present in the torch to control the quantity of oxygen and acetylene. By this control, the grade of the flame can be altered. The size of the flame is altered to suit the thickness of the metal parts. *A welding torch is shown in Fig. 8.5*

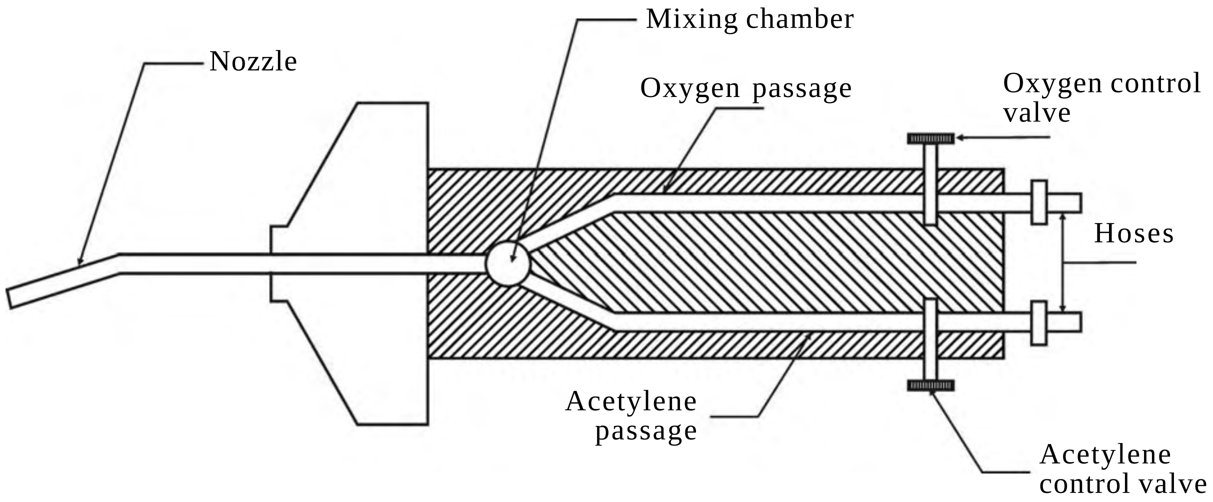

Fig 8.5 Welding torch

8.8.6 Goggles

Oxy acetylene flame emits ultraviolet and infrared rays. These rays are highly harmful to bare eyes. In order to protect the eyes of the welder, goggles should be used by him.

8.8.7 Welding gloves

Protective hand gloves are used by the operator to prevent possible damages that may be caused by high temperatures and metal splashes during welding.

8.9.8 Spark lighter

Spark lighter is used to ignite the oxy-acetylene gas at the tip of the welding torch.

8.8.9 Wire brush

Wire brushes are useful in cleaning the weld before and after the welding process.

8.9 Types of gas flames

The size of the flame can be altered by varying the ratio of oxygen and acetylene. By doing so, the following three types of flames are obtained.

1. Neutral flame
2. Carburising flame
3. Oxidising flame

8.9.1 Neutral flame

The supply of equal quantities of oxygen and acetylene produces neutral flame. There are two zones in this flame- 1. Sharp and bright inner cone and 2. Bluish outer cone. The temperature of the inner cone will be around 3200°C. This neutral flame is generally used as it will not cause any chemical reaction upon the heated metal.

8.9.2 Carburising flame

This flame is also known as reducing flame. The supply of acetylene will be more than oxygen to produce this flame. Carburising flame consists of three zones namely,

1. Sharp inner cone
2. White intermediate cone
3. Bluish outer cone

Carburising flame is useful in welding low carbon steel and alloy steels. It is also used to harden the outer surface of metal parts.

The types of gas flames are shown in Fig. 8.6

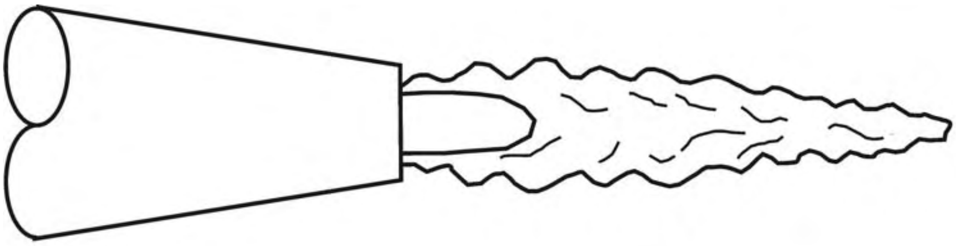

Neutral flame

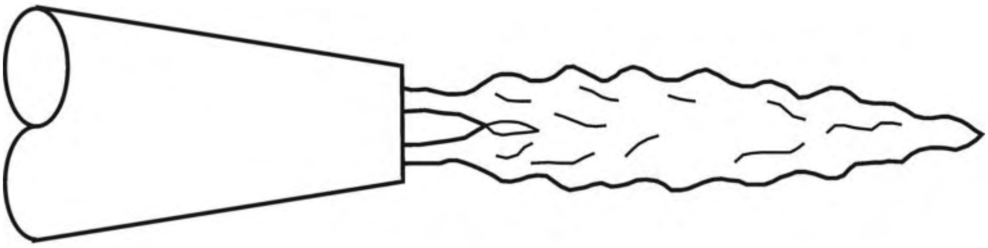

Carburising flame

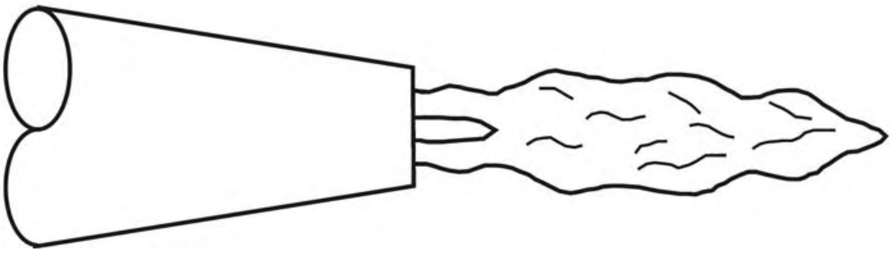

Oxidising flame

Fig 8.6 Types of flames

8.9.3 Oxidising flame

Oxidising flame is obtained by supplying more oxygen than acetylene. It consists of two zones namely bright inner cone and outer cone. This flame is useful in welding brass and bronze.

8.10 Filler rods used in gas welding

Filler rods used in gas welding supply the additional metal in making joints. These rods are melted by the gas flame and deposited over the parts of the joint. Generally the filler rods are made of the same metal as that of the parts of the joint.

The diameter of the filler rod depends upon the thickness of the parts to be welded. The strength of the welding joint is increased by adding Nickel or Chromium in filler rods. A thin coat of copper is provided on the filler rods to prevent the molten metal from reacting with atmospheric oxygen. Flux may be applied either in powdered form or liquid form.

8.11 Advantages of gas welding

1. Applied for different classes of work
2. Welding temperature is controlled easily
3. The quantity of filler metal added in the joint can easily be controlled
4. The cost of the welding unit is less
5. The cost of maintenance is less
6. Both welding and cutting can be done

8.12 Limitations of gas welding

1. Intended for welding thin workpieces only
2. The process of welding is slow
3. The time taken by the gas flame to heat the metal is more when compared with electric arc
4. The strength of the joint is less
5. Great care should be taken in handling and storing gas cylinders

8.13 Differences between arc welding and gas welding

Arc welding	Gas welding
1. The heat is generated by the electric arc	1. The required heat is provided by the gas flame
2. The working temperature is about 4000°C	2. The temperature of the gas flame is about 3200°C
3. The filler rod is used as electrode.	3. Filler rod is used separately
4. Care should be taken aginst the dangers that may be caused because of electricity	4. The danger of the process is because of the gases at high pressure
5. The strength of the joint is more	5. The joint is not as strong as that of arc welding
6. Brazing and soldering cannot be performed by the electric arc	6. The processes of brazing and soldering can be done with the gas flame
7. The filler rod metal should be selected as the same metal as that of the parts of the joint.	7. The filler rod metal can be different from that of the parts of the joint.

8.14 Resistance welding

The process of resistance welding involves

(i) developing electrical resistance in the parts of the joint to bring them into a plastic state and

(ii) applying pressure on the parts to make the joint

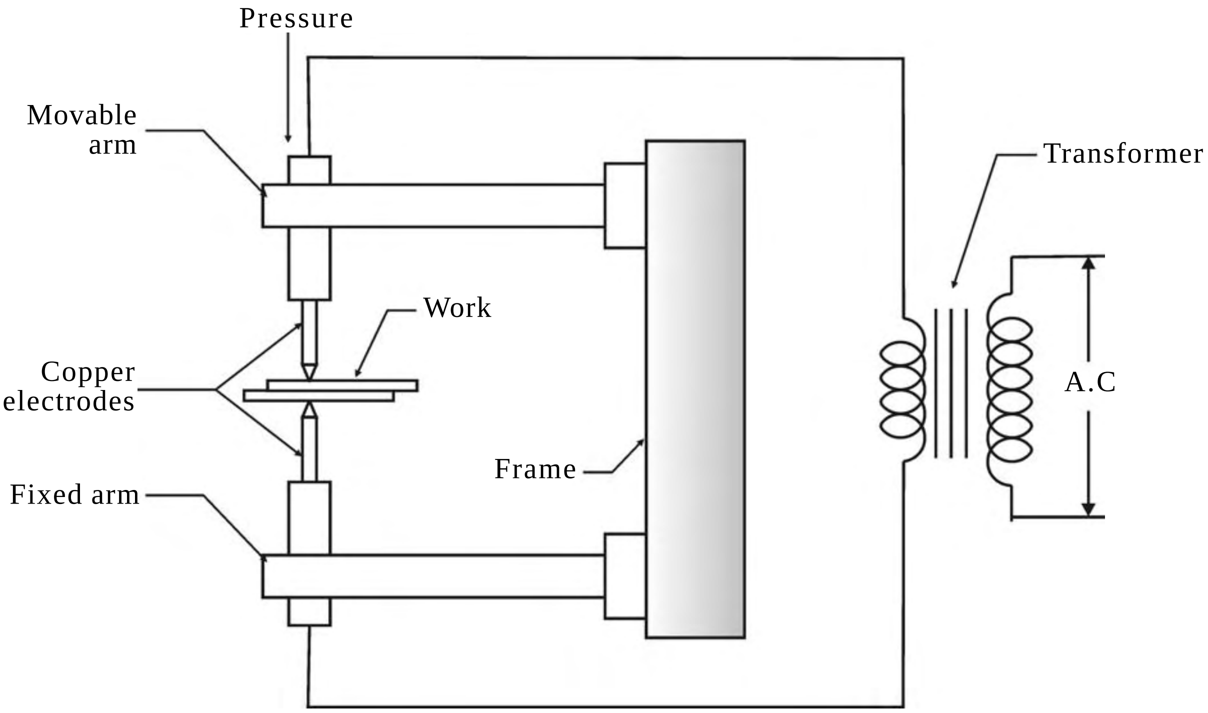

Fig 8.7 Resistance welding

Two copper electrodes are connected to an electric circuit of low resistance. The parts to be welded are placed between the electrodes. When current is allowed to pass through the electrodes, high electrical resistance is developed at the joint. Because of the resistance, heat is generated at the joint. The metal parts reach plastic state at this high temperature.

At this point, pressure is applied by means of either mechanical or hydrulic or pneumatic power source to make the joint. Current is provided by a suitable A.C. transformer. Resistance welding is useful in welding sheet metal, bars and pipes.

Fig. 8.7 shows resistance welding.

8.15 Welding related processes

Following are some important welding related processes used in industries.

1. Oxy-acetylene cutting
2. Arc cutting
3. Hard facing
4. Soldering
5. Brazing

8.15.1 Oxy-acetylene cutting

Plates made of iron and steel are cut by oxygen, acetylene cutting torch. Oxygen and acetylene are mixed in the cutting torch and a gas flame is generated. The flame heats the sheets to bring them to red hot condition. High pressure oxygen is supplied on the red hot metal through a separate central hole of the cutting torch. Iron and steel sheets are thus cut by the jet of oxygen. *Fig. 8.8 shows oxy-acetylene cutting*.

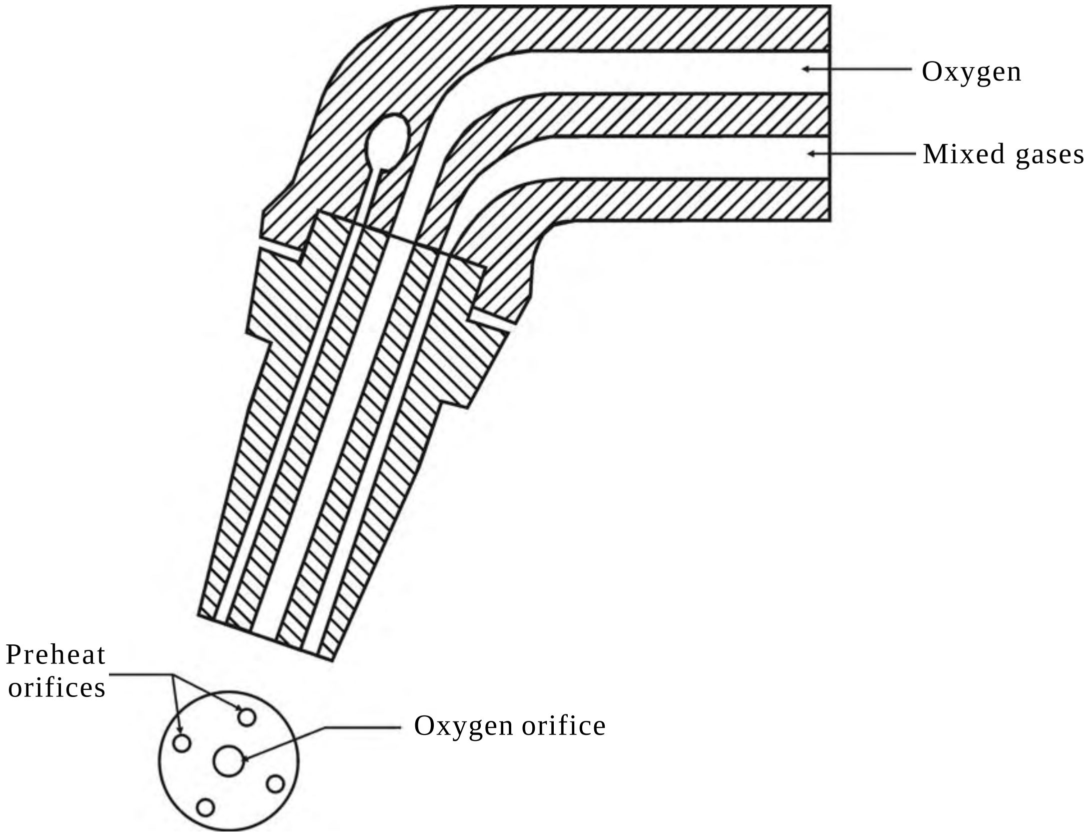

Fig 8.8 Oxy-acetylene cutting

8.15.2 Arc cutting

In this process, the metal parts are heated by means of carbon or metal electrodes. High pressure air is supplied on the molten metal to remove it and cut the metal parts. Oxygen jet is supplied along with the electrode instead of air nowadays. Arc cutting is not suitable for accurate work.

8.15.3 Hard facing

Hard facing is a process of coating a hard matrial on soft metal parts. Powdered coating metal is filled in the welding gun. The metal powder is melted by the oxy-acetylene gas flame. The supply of inert gas at pressure makes the powdered metal to split into small particles. These particles are sprayed on the surfaces of the soft metal. Coatings of Tungsten carbide, Chromium carbide and Aluminium oxide can be made on the surfaces of different cutting tools and cutters. *Fig. 8.9 shows hard facing.*

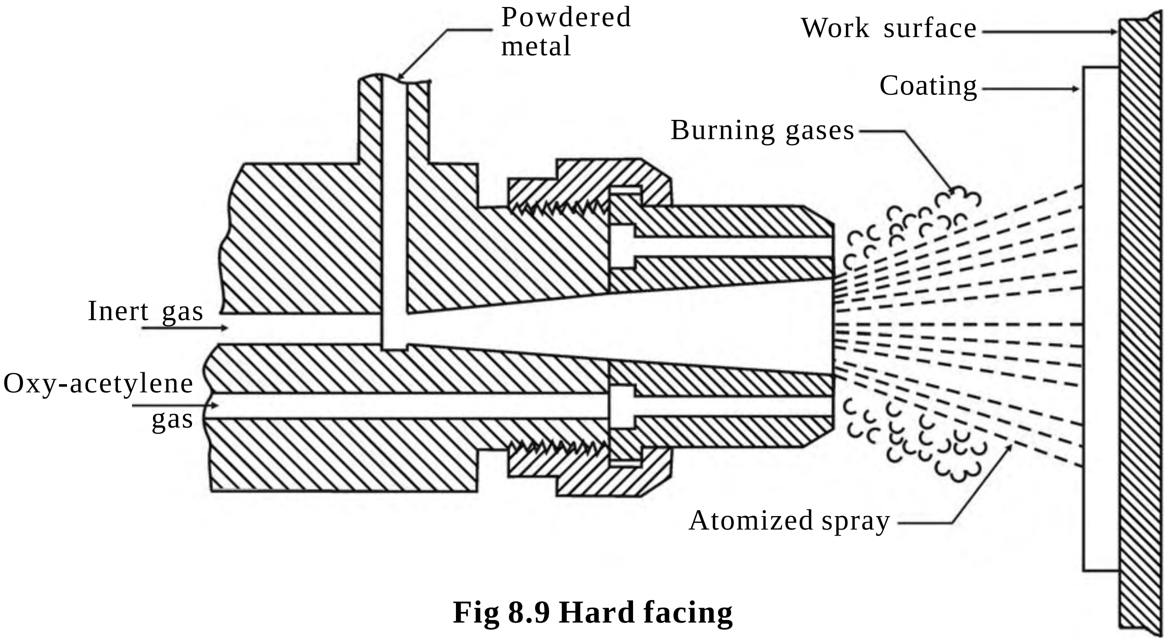

Fig 8.9 Hard facing

8.15.4 Soldering

Two parts made of similar or dissimilar metals are joined by a solder made of a fusible alloy. Solder is an alloy made of Tin and Lead. The melting temperature of the solder is in the range of 150°C to 350°C. The surfaces of the two metal parts are cleaned and held in correct positions. Flux paste made of Zinc chloride is applied on the parts by soldering iron. Application of flux prevents oxidation. The solder is melted by the heat provided by the soldering iron and filled between the metal parts. The solder solidifies and joins the metal parts. *Soldering is illustrated in Fig. 8.10.*

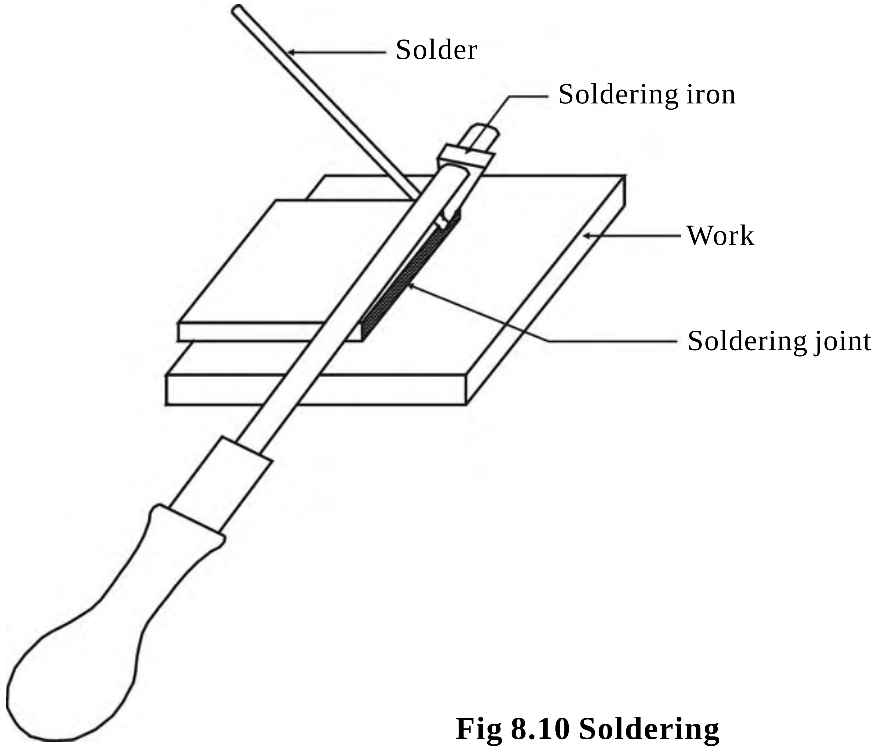

Fig 8.10 Soldering

8.15.5 Brazing

In brazing, filler metal in molten state is filled between the metal parts of the joint. The filler rod is heated upto 450°C. The parts to be joined are cleaned and the molten filler metal is applied between the parts to make the joint. In this method, the metal parts are not melted. *The process of brazing is illustrated in Fig. 8.11.*

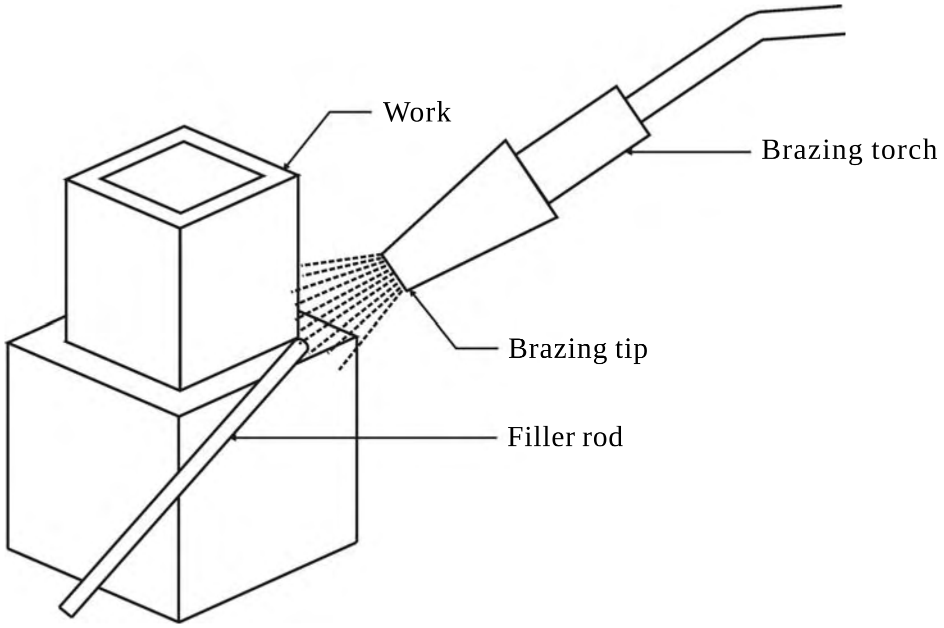

Fig 8.11 Brazing

8.16 Types welded joints

Following are the types of welded joints

1. Butt joint
2. Lap joint
3. T-Joint
4. Corner joint
5. Flange joint

8.16.1 Butt joint

Butt joint is a joint in which the corners or the edges of two metal parts are joined. The process is done by keeping the metal parts on a same plane. The edges of metal parts of thickness upto 5 mm may be kept open square. If the thickness of the metal parts exceeds 5 mm, edges of the parts need to be prepared in proper shape before welding. *Different types of welded joints are shown in Fig.8.12*

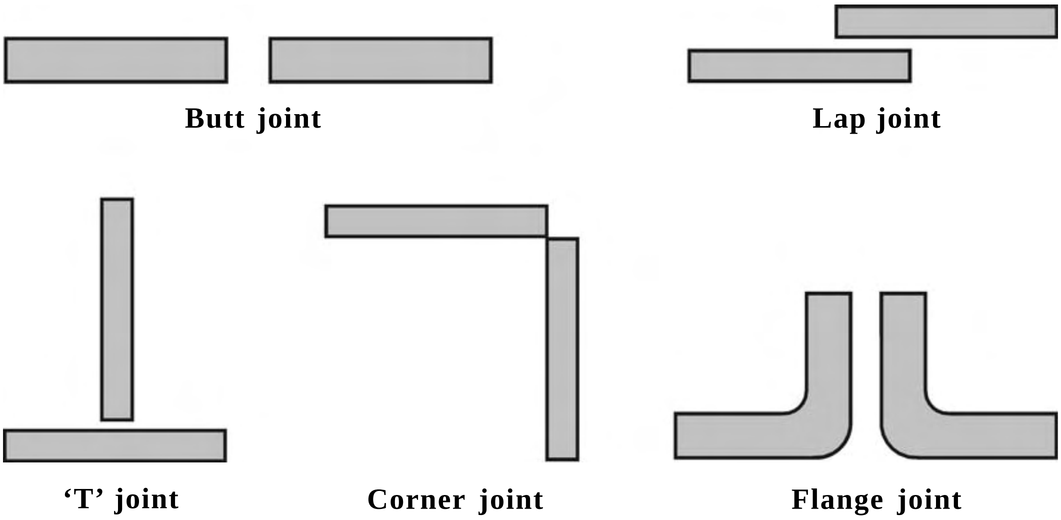

Fig 8.12 Types of welded joints

8.16.2 Lap joint

It is a joint in which the metal plates are placed overlapping before welding. The edge of one part is welded with the surface of the other plate. There are two types of lap joint namely (i) Single lap joint and (ii) double lap joint.

8.16.3 T-joint

This joint is made by keeping the metal plates at perpendicular (90°) to each other. Sheets with thickners over 3 mm only are welded by this type

8.16.4 Corner joint

Two metal sheets kept at 90° to each other are welded by this joint. This method is adopted when making boxes and tanks. Corner joints are adopted for thin and thick sheets.

8.16.5 Flange joint

The plates of the joint may be kept parallel or at 90° to each other. The edges of the plates are bent to form the shape of a flange.

8.17 Safety precautions for welding

We make use of electrical devices and inflammable gases like oxygen and acetylene in welding. If proper care is not shown in handling them, there is always a possibility of accidents taking place. So,welding process should be carricd out with due safety and caution.

8.17.1 Safety precautions to be observed during gas welding

1. Gas cylinders should be kept in ventilated locations.
2. Cylinders should not be kept near hot locations. They should be kept away from electrical terminals.
3. Pressure regulators should be closed after the welding work is completed.
4. Regulators should be handled properly.
5. Old and worn out regulators should be replaced immediately.
6. The operator should wear goggles, gloves, apron and proper footwear.
7. Fire extinguishers and First-aid box should be kept ready always.

8.17.2 Safety precautions to be observed during arc welding

1. The welder should always wear goggles. gloves, apron and proper footwear during welding.
2. Welding shop should be located properly so that it does not cause any discomfort to others.
3. The welder should act carefully against electric shocks.
4. A high quality electrode holder should be put into use.
5. Power supply should be provided at required voltage and uniform current.
6. Fire extinguishers and First-aid box should always be kept ready in a welding shop.

QUESTIONS

I A. Choose the correct option

1. Atomic hydrogen welding is a ------------ process

    a. gas welding   b. resistance welding

    c. arc welding   d. solid state welding

2. The working temperature of arc welding is

    a. 100°C-150°C   b. 50°C-100°C

    c. 5000°C-6000°C   d. 150°C-200°C

3. The pressure of oxygen in the cylinder of gas welding equipment is

    a.16 kg/cm^2 b. 125kg/cm^2

    c. 100kg/cm^2 d. 14kg/cm^2

4. The presssure of acetylene in the cylinder of gas welding equipment is

    a. 16kg/cm^2 b. 125kg/cm^2

    c. 100kg/cm^2 d. 14kg/cm^2

I.B. Answer the following questions in one or two words

1.Name the flame obtained by supplying more acetylene than oxygen.

2. Which is otherwise known as plastic welding?

3. Which type of welding converts electrical energy into heart?

4. Which type of welding require filler rods?

5. Name the colour of the hose which connects the oxygen cylinder with the welding torch in gas welding.

6. Name the colour of the hose which connects the acetylene cylinder with welding torch.

II. Answer the follwing questions in one or two sentences

1. How is welding done?

2. What are the methods of welding?

3. How is the welding electrodes specified?

4. What are the types of electrodes?

5. Name the three types of flames generated in gas welding?

6. Write short notes on filler rods used in gas welding?

7. Write any four advantages of gas welding?

8. What are the limitations of gas welding?
9. What are the types of welded joints?

III. Answer the following questions in about a page

1. List out the types of welding.
2. Discribe arc welding with a diagram.
3. Name and explain the equipments required for arc welding.
4. List out different electrode metals for welding parts of different metals.
5. Explain any two types of flames obtained in gas welding with diagrams.
6. What are the differences between arc welding and gas welding
7. List out the safety precautions to be observed during arc welding and gas welding.

IV. Answer the following questions in detail

1. Explain carbon arc welding with a diagram.
2. What are the differences between DC arc welding generator and AC arc welding transformer?
3. Explain any five equipmants used in gas welding.
4. Explain gas welding with a diagranm.
5. Explain resistance welding with a diagram.
6. Explain any four welding related processes with diagrams.
7. Explain any four welded joints with diagrams.

9. CNC MACHINES

9.1. Introduction

Production is a process of converting raw material into finished products. The process of production is achieved by the collective efforts of man and machine using materials and tools. It requires information and energy to accomplish production by machining. Over the period of time, several techniques and methods are used in the process. The evolution of new methods of production saw the increasing involvement of machines in providing the information and energy required for production and the role played by the humans declined. Prepared programs consisting of informations and instructions took the role of controlling the machines instead of manual control. This has led to a manufacturing system of higher production at lower cost with more accuracy.

9.2. Numerical Control

In NC System, intervention of human beings in the machining process is substituted by some operating instructions in a coded form. This coding otherwise known as part program is stored in cards or tapes. Getting the required instructions from these input media, the machine carries out different tasks in a proper sequence.

Numerical control can be defined as a system in which actions of a machine tool are controlled by recorded informations in the form of numerical data.

Computer Numerical Control

When the activities of a Numerical Control machine is administered by a dedicated computer, it is known as Computer Numerical Control machine tool. The functions of the machine tool are controlled by the instructions stored as programs in the computer.

9.3 Elements of NC machines

As explained in the previous section, the NC system requires the preparation of manuscript (part program) based on the product drawing, preparation of input media (punched cards & punched tapes), the data entry into the control unit, consequent processing and actuation of the machine tool to produce the desired part.

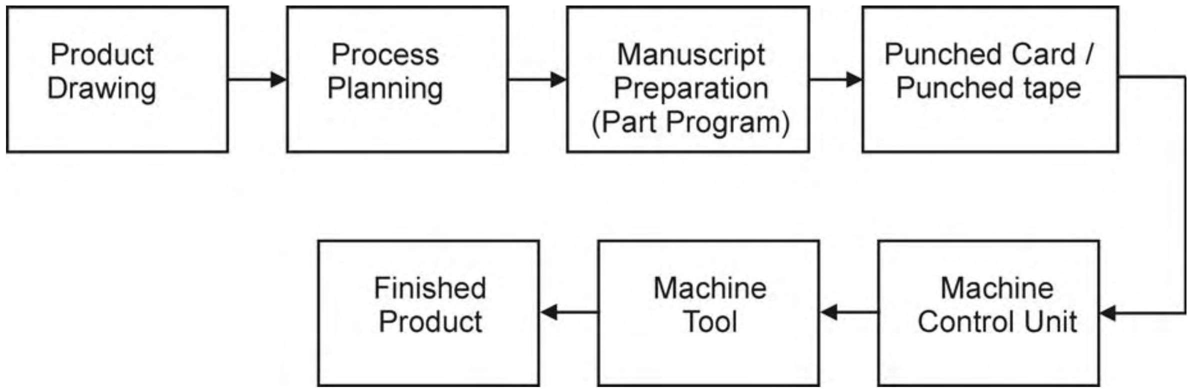

Fig 9.1 Lay-out of a NC System

In performing all the above operations, the NC machine may have the following elements:

1. Software
2. Machine Control Unit
3. Driving devices
4. Manual control unit
5. Machine tool

9.3.1 Software

A series of instructions are required to control the actions of a NC machine. These instructions are prepared based on the profile and the material of the part being manufactured. These instructions and their storage media can be called as software.

Software of a NC system can be referred to as items comprising of instructions (programs), languages used to write these programs and a variety of input media.

The instructions given to the NC machine may be dimensional or managerial. They are fed into the control unit as different numbers only. The decimal system of numbering uses 10 digits (0 to 9) to represent any number. The base of the numbers will be 10. But in order to provide informations into the control unit or a computer, a convenient system of numbering known as binary format is used. In this system, only two digits (0 & 1) are used and the base is 2. All instructions and informations are converted as numbers consisting of digits 0 and 1. It becomes easy to record the informations on punched tapes or punched cards in the form of holes (Holes may indicate 1 and no hole may represent 0)

Input media

Different types of input media are used to store informations and to provide input to various control units of the NC machine. They are

1. Punched cards
2. Punched tapes
3. Magnetic tapes
4. Floppy disks

Punched cards and punched tapes are useful in storing data in the form a series of punched holes along their length. Punched tapes may be made of paper, a plastic material known as mylar or Aluminium foils. Magnetic tapes are made of plastic material and are coated with Gamma ferric oxide layer. The advantages of magnetic tapes as input media are (i) their greater strorability and (ii) data can be erased and be reused.

9.3.2 Machine Control Unit (MCU)

Machine Control Unit consists of electronic circuits (hardware) that are useful in reading and interpreting the instructions (NC program) fed by means of input media and convert them into mechanical actions of the machine tool.

Generally, the MCU may be of three types

(i) Inbuilt type
(ii) Swing around type
(iii) Stand alone type

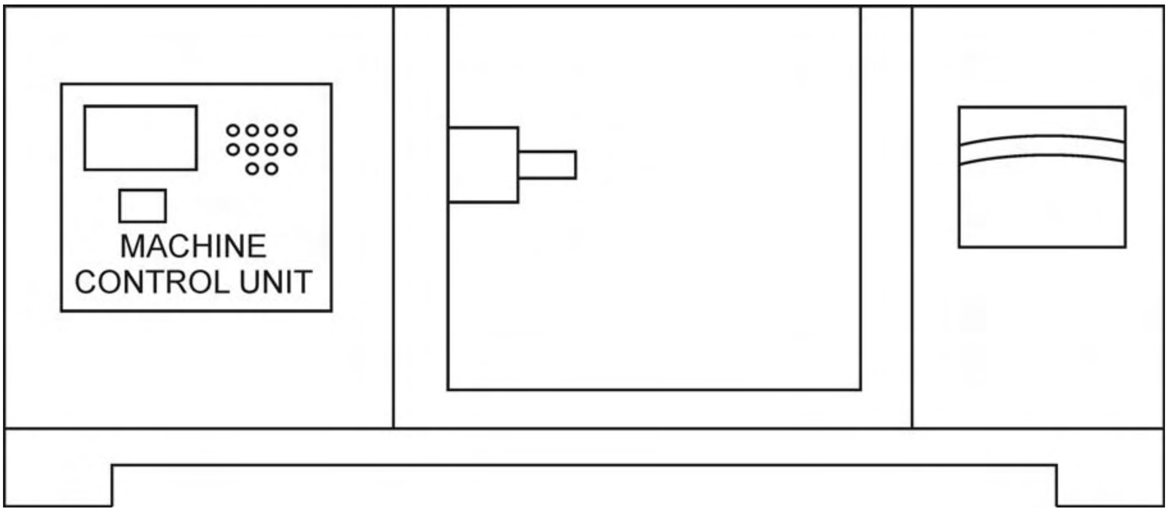

Fig 9.2 In-built MCU

Inbuilt MCU

When the control unit of the NC machine is housed in the construction of the machine itself, it is known as Inbuilt MCU. *Fig. 9.2 shows a inbulit MCU.*

Swing atound MCU

This MCU is a separate unit and is connected to the machine by a swinging arrangement. The unit as a whole can be swung around the machine depending upon the position of the operator. *Fig. 9.3 shows a swing around MCU.*

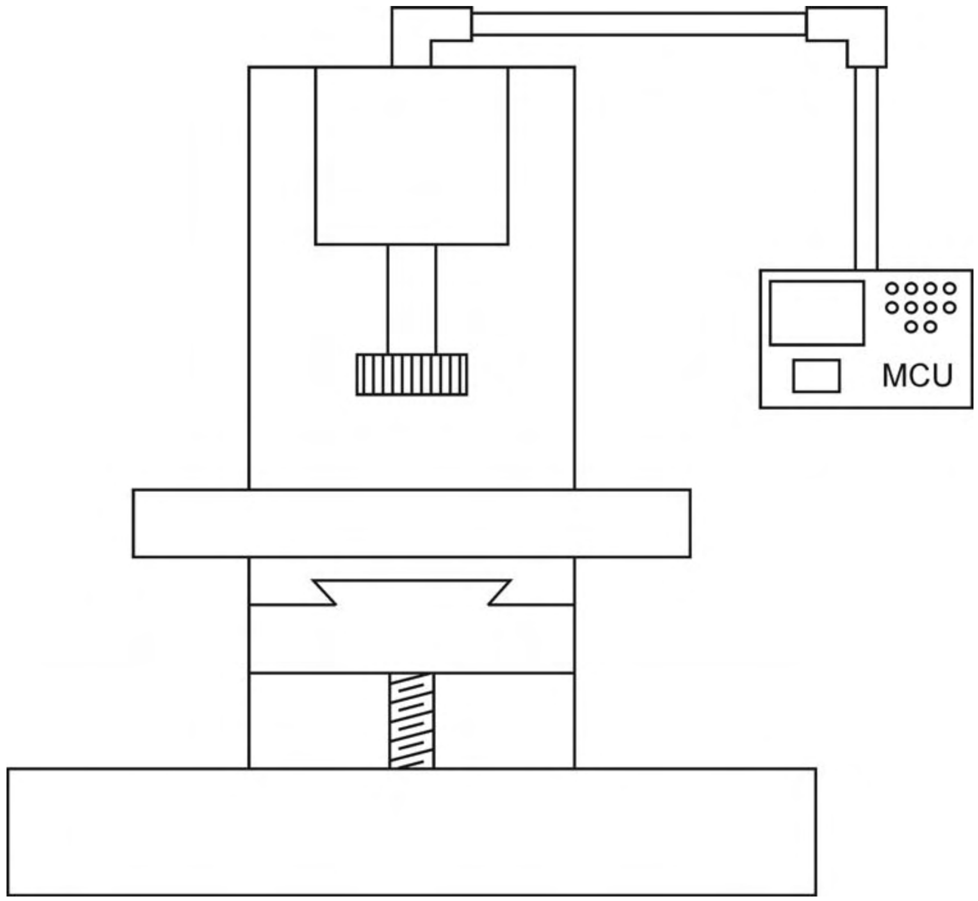

Fig 9.3 Swing around MCU

Stand alone MCU

Stand alone MCU is designed as a separate unit and placed at a distance from the machine.

Fig. 9.4 shows a stand alone MCU.

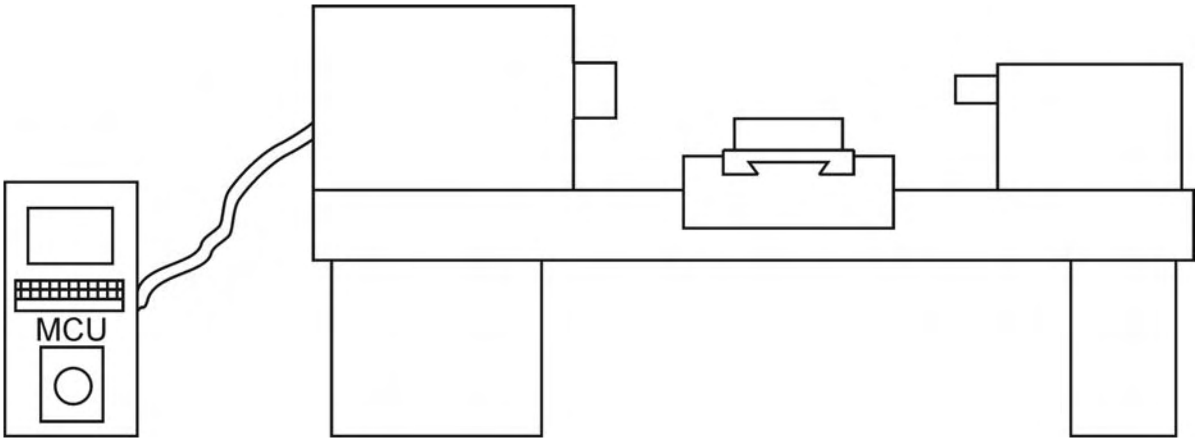

Fig 9.4 Stand alone MCU

Elements of a Machine Control Unit

In general, a Machine Control Unit consists of following elements

1. Input reading unit
2. Memory unit
3. Processing unit
4. Output channels
5. Feedback unit

Input reading unit

It is a electro - magnetic device useful in reading the NC programs in the form of instructions.

The main functions of a input reading unit are

1. To accept the input media like punched cards, punched tapes, magnetic tapes and floppy disks
2. To send them into a reading unit to extract the information stored in them
3. To process the collected information
4. To collect the input media to be used again

Different types of reading equipments are used to extract the stored data from punched cards and punched tapes. They may be of mechanical, optical or pneumatic type. Magnetic tape readers are used to retrieve the data from magnetic tapes and disks.

Memory unit

A block of information received from the input media consists of words and codes. Sequential informations are arranged in a desired order as separate blocks. These blocks of informations are stored in a temporary memory known as buffer memory. The memory unit will provide the information blocks to the processing unit in the desired sequence.

Processing unit

The processing unit serves as a link between the memory unit and output channels. The processor does the duty of co-ordinating and controlling the other units of the MCU. The informations received from the buffer are processed here and appropriate signals are given to various units at particular points of time. Until a few years ago, processors made use of vacuum tubes and transistors. But recently, when the era of Integrated Circuits (IC) has dawn, processors are driven by ICs.

Output channels

Mostly output channels are the pins found on ICs or the wires coming out of processors. These channels emit electric pulses of very low voltage / current. The pulses are the result of processed information based on the NC program. In order to drive or actuate various slides of the machines, the pulses are amplified by means of electronic or electro - magnetic amplifiers or thyristors.

Feedback unit

Feedback unit consists of some electrical or electronic hardware. This is used for converting physical quantities like displacement or velocity into electrical pulses. This system is used in a NC system to check whether the operations are carried out in accurate manner.

The system of operation of a NC machine mainly depends upon the accurate displacement of slides and proper speed of driving units. The actual quantity of these factors during the operation is measured, converted as electrical pulses and sent back to processing unit for checking.

The devices used to convert one form of physical quantity into electrical pulses is known as transducers. Transducers used in a NC system are of two types

1. Velocity transducers
2. Position transducers

Velocity transducers:- They are used to measure spindle speed and slide velocity. An electric tachometer can be used as a velocity transducer.

Position transducer :- They are used to measure slide displacement.

9.3.3 Driving devices

Driving devices consist of different types of motors and gear trains. They convert the instructions form the MCU into accurate mechanical displacements of the machine tool slides. The motors may be electrical, hydraulic or pneumatic.

Electrical motors are mainly used as prime movers because of their speed and torque characteristics. A.C. induction motors are cheap and easy to maintain. For easy and effective speed changes, D.C. motors are also used.

Hydraulic motors are used in some specific types of CNC machines. Hydraulic motors get the drive from oil pumped from a constant delivery hydraulic pump. Hydraulic motors are used where the load is high and wider range of speed is necessary.

Servomotor, stepper motor, synchros and resolvers are different types of motors used as drives in NC machines.

9.3.4 Manual control unit

Manual control unit consists of dials and switches to be operated by the operator. It may also have a display unit to provide useful informations to the operator. In some machines, the manual control unit may be a part of the MCU (machine control unit)

The operator use the manual contrl unit to

1. switch on and off the machine
2. load and unload the workpieces and
3. change the tools in certain types of machines

9.3.5 Machine tool

It is the element of the NC machine which actually performs the useful work of converting the raw material to finished components. It is designed to perform various machining operations. It consists of a machine table, spindles, cuttingtools, work holding devices such as jigs and fixtures, coolant systems, swarf removal systems and other auxiliary equipments.

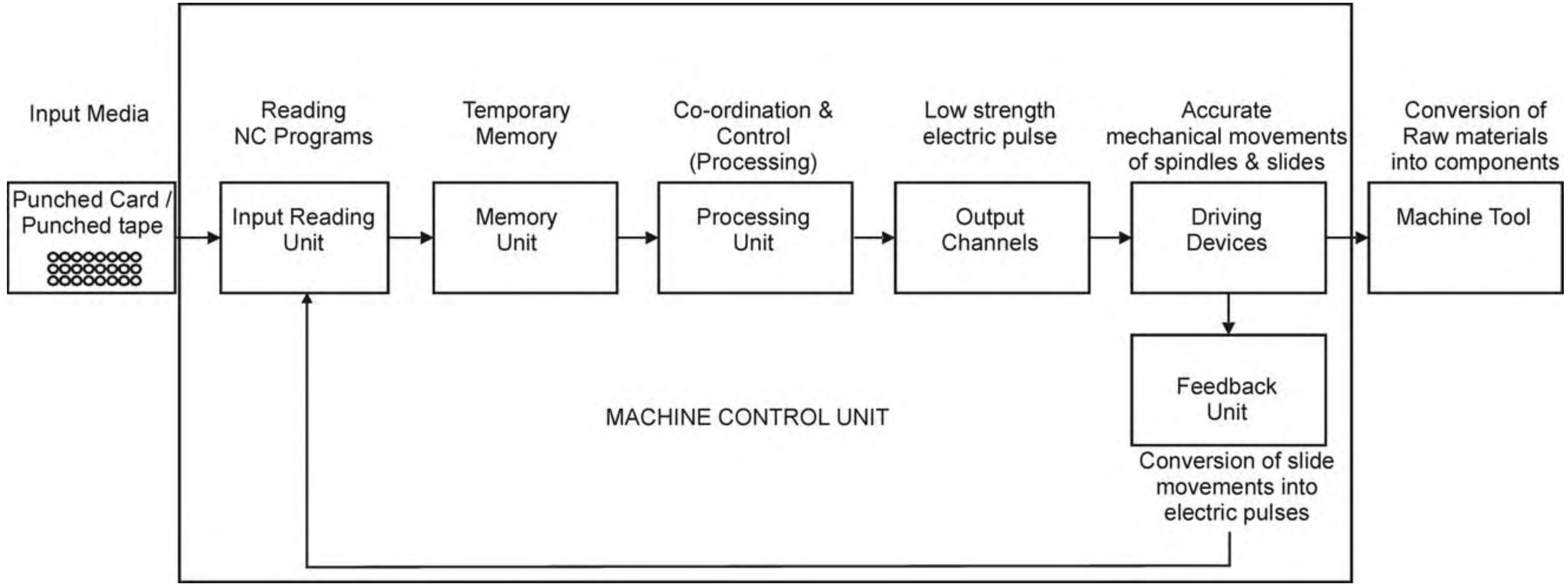

Fig 9.5 Lay out of a NC machine tool

9.4 Classification of NC machine tools

According to various features, NC machine tools are classified as the following

A. According to the type of power to the drives

a. Electrical

b. Hydraulic

c. Pneumatic

B. According to motion control system of slides

a. Point- to - point system

b. Contour (or) continuous path system

C. According to the feedback system

a. Open loop system

b. Closed loop system

D. According to axis identification

a. 2- axis

b. 3- axis

c. 4- axis

d. 5- axis

9.5 Motion control system

The cutting tool and the work are located at certain postions in NC machine. During the machining, they are moved from their positions with relation to each other. The system involved in moving the cutting tool and the work is known as motion control system.

9.5.1 Point - to - point motion control system

It is a system in which the cutting tool is located at a particular point in relation to the work. Machining is performed only after the cutting tool and the work are located at defined positions and there will not be any change in their positions during machining. This system is also called positioning system for this reason. When machining at the particular position is over, the cutting tool (or) the work (or) both are moved to be relocated to different points for subsequent machining. The relocation is achieved by their movement in two main axes (x axis and y axis). This is the reason for this system to be called as point - to - point system. The NC machines with point to point system are simple in construction and are cheaper. They are adapted for drilling machines, jig boring machines and spot welding machines.

9.5.2 Continuous path motion control system

In this system, both the cutting tool and the work change their positions during machining. The movement of the cutting tool and the work is simultaneous in all axes and in all planes each at different speed. This system is also called as contouring system and is mainly used in milling machine.

9.6 Feedback System

In NC machine system, the instructions are picked from the punched card or tape by the reading Unit. Processors send electric pulses which actuate the motors and slides to govern the movement of the spindle or tables. A control system is necessary to check the actual output movement with the desired value as given in the input. This system is known as feedback system.

9.6.1 Open loop System

When a NC system does not have any feedback arrangement, it is known as open loop system. Actual output movement is not directly measured and checked with the desired movement.

9.6.2 Closed loop system

In this system, the final movements (spindle speed and slide displacement) are compared and balanced with the values given through the input commands. The movements of spindle and slides are measured by feedback devices like velocity transducers and position transducers and sent back to control unit for comparing. If the feedback values does not match with the input values, the difference is corrected. This system is adopted where highest positional accuracy is required.

9.7 Advantages of CNC machines over conventional machine tools

With the advent of CNC machines, several advancements are seen in the field of manufacturing. The advancements prove to be very advantageous when comparing them with convetional machine tools. The advantages are

1. The process of production planning becomes easy and effective.
2. As the CNC machines are capable of doing several machining operations, the output of a single CNC machine is equivalent to the output of many conventional machines.
3. The above fact ensures a considerable reduction of floor space and storage space.
4. The lead time required for the preparation of punched cards and tapes is very less when compared with the preparation of jigs and fixtures.

5. Parts can be run economically in smaller quantities and it reduces the inventory.

6. The design change of the component (if necessary) can be done easily and quickly.

7. As the CNC machines require very little attention of the operator, the machine utilisation is better.

8. Expensive jigs and fixtures are not necessary for location and holding. It reduces the tooling costs.

9. Production of a workpiece requires very few set ups because more operations can be performed at each set up of the work.

10. The accuracy achieved is very high. It leads to better assembly and reduces fitting costs. The quality of the product also becomes better.

11. Operator errors are substantially reduced and so very less scrap is produced.

12. As a single operator can supervise several machines at a time, the labour cost is reduced.

9.8 Programming for CNC machines

Based on the component drawing, a lot of informations are needed to be fed into the control unit for processing and machining. The informations include dimensions, shape, cutting speed, feed, depth of cut, sequence of operations, tool and work material. The said informations should be fed into the machine control unit in an acceptable form. Preparation of the instructions in the above form is known as programming.

9.8.1 Part program

A series of instructions describing the part to be produced in an acceptable form to the control unit or computer is known as part program. Generally part programming is done by the following methods.

1. Manual part programming
2. Computer assisted part programming.

APT (Automatically Programmed Tools), ADAPT, EXAPT, SPLIT, PROMPT are some of the high level languages used for writing NC programs.

9.9 Advancements in NC machines

After the modern micro-processor based computers took control of the NC system, the technology in this field has grown tremendously. Following are two major advancements of NC system.

1. Direct Numerical Control (DNC)
2. Adaptive Control (AC)

9.9.1 Direct Numerical Control (DNC)

A manufacturing system in which several NC machines are connected to and controlled by a remotely located main frame computer, is known as Direct Numerical Control. The basic constituents of the system are (i) Main frame computer (ii) Bulk memory (iii) Nerwork system and (iv) NC machine tools.

DNC system eliminates the need of separate machine control units, input media like punched card and tapes. This system looks after the scheduling of work of all the NC machine tools. The required network system may be a LAN (Local Area Network) or a WAN (Wide Area Network).

9.9.2 Adaptive Control

Adaptive control is a system in which an important feature of decision making is employed during machining. When a component is being manufactured, some important process variables like torque, force and temperature are measured. These values are compared with established limits. On comparison, the process of production is modified by the adjustment of cutting speed, feed and depth of cut. This system enables cost effective, quality and high rate of production.

QUESTIONS

I.A. Choose the correct option

1. Production is achieved by

   a. man and machine — b. materials and tools

   c. men, machine, materials and tools — d. men and tools

2. In NC system, the program instructions are given as

   a. information — b. numerical data

   c. symbols — d. encryption

3. IC refers to

   a. Information Control — b. Instruction Control

   c. Internal Control — d. Integrated Circuits

4. Easy and effective speed changes can be done with

   a. Electrical motors — b. D.C.motors

   c. A.C.induction motors — d. Hydraulic motor

5. Output channels are found as pins on the

a. memory unit | b. feedback unit
c. processors | d. driving devices

6. Transducers are

a. feedback devices | b. memory unit
c. output channels | d. processors

7. When a NC system does not have any feedback arrangement, it is known as

a. positioning system | b. contouring system
c. closed loop system | d. open loop system

8. Diredt Numerical control (DNC) needs

a. On-site supervisors | b. adaptive control
c. network system | d. feedback system

I B. Answer the following questions in one or two words

1. What are numbers used in binary format of numbering?
2. Expand - MCU.
3. Name two input media used in NC systems.
4. How is temporary memory otherwise known as?
5. What is the main duty of the processing unit?
6. What do the output channels emit?
7. What are the types of transducers?
8. How are NC machine tools classified according to feedback system?
9. What are the motion control systems in NC systems?
10. Name two major advancements of NC systems?

II. Answer the following questions in one or two sentences

1. Define - Numerical Control.
2. What do you mean by software of a NC system?
3. What is Machine Control Unit?
4. What are the types of MCU?
5. Mention the functions of input reading unit?
6. How is processing unit important in a NC system?
7. Write short notes on ‘Output channels’.
8. What is manual control unit?

9. What are the uses of manual control unit?
10. How are NC machine tools classified?
11. What is motion control system?
12. Define - Part program.
13. Name some high level languages used to write NC programs?
14. What is Direct Numerical Control?
15. What is Adaptive Control?

IV. Answer the following questions in about a paragraph

1. Explain a NC system.
2. Explain (i) software (ii) input media.
3. What is MCU? Explain its types?
4. Explain driving devices of a NC system?
5. Explain the types of feedback system?
6. Briefy explain the advancements in NC machines.

10. MACHINE TOOL MAINTENANCE

10.1 Introduction

"Prevention is better than cure". With reference to this proverb, the task performed to make the machine tools work perfectly is called 'Maintenance'. This is achieved by ensuring that machine tools, cutting tools and measuring instruments function properly without any fault.

10.2. The objective of 'Maintenance'

The primary objective of the maintenance department is to ensure the machine tools, instruments, tools and accessories in good working condition. It is also necessary to ensure safety to both the machine tools and the operator. The accuracy and efficiency of the machine tools and the instruments are also to be maintained properly. By performing maintenance, we can avoid accidents inside the workshop and increase the production capacity.

All the machine tools are driven by electrical motors. It is necessary that the switches, fuse, the connections and other controls should be in order. Care should also be taken to keep in good conditions the parts used for transmitting power from the motor – gears, chain drive, belt drive etc.,

The rotating shafts of the machine tools are fitted with bearings and suitably supported by different types of brackets. As bearings are precision parts, we have to apply grease or any lubricating oil at recommended intervals to keep them in good operating conditions. The sliding parts of various machine tools should be maintained cleanly without any dirt on them. The metal chips should be cleaned at regular intervals.

The moving and rotating parts should be properly lubricated at the brackets where they are fitted.

The coolant pumps, filter elements, pipelines and valves should always be in good working condition.

The tools, accessories, special attachments and measuring instruments should be in good working conditions and be placed in their respective places.

10.3 Wear & tear and backlash

Wear and tear

Due to continuous working of a machine tool and the nature of work performed on it, wear and tear is observed in the sliding parts of machine tools. As a result of this, the accuracy of the products is affected. In remedy, it is necessary to repair the said machine tools. The affected parts are to be replaced if necessary.

Backlash

Some slackness is observed in holding of parts, meshing gears or bolt and nut assembly. This slackness is known as backlash. If the amount of backlash is more in the case of mating gears, they should be replaced. The wear and tear on the gears should be observed once in a week time.

10.4 Machine tools

The term machine tools refers not only the cutting tool. It means the machines, cutting tools, attachments, measuring instruments and accessories.

10.5 Lubrication

Rotating and sliding parts, which make contact with other parts, are subjected to wear due to friction. Viscous oil called lubricant is applied to these parts to avoid direct contact between them. The process of reducing friction is called lubrication.

Applying oil or grease to the axle shaft of the bullock cart and the cycle wheel, gearbox of automobiles, motor shafts of pumps, fans and sewing machine are some examples of lubrication.

Friction occurs as the shafts are rotating and the sliding parts moving on each other. It generates heat and the parts get damaged.

In order to keep the machine tools accurate and durable, it is necessary to apply lubricants between mating parts. It will reduce friction and wear is minimised.

Lubrication is the nerve centre of machine tool. As it is blood circulation for the human body, lubrication is for the machine tools.

10.5.1 The machine parts which need to be lubricated

1. Mechanisms of hydraulic systems
2. Guideways and sliding parts
3. Rotating shafts
4. Gear box
5. Feed box
6. Speed changing mechanisms
7. Bearings

10.5.2 Objectives of lubrication

1. Smooth functioning of sliding and moving parts
2. To reduce friction and consequent wear
3. To remove burrs and dust
4. To reduce the heat generated due to friction
5. To prevent rust formation on precise parts
6. To provide cushioning effect to the load shocks
7. For hydraulic circuits to transmit power

10.5.3 Types of lubricants

The materials used for reducing wear between moving and sliding parts are called lubricants. Though there are many types of lubricants available, oil and grease are mostly used.

Grease

Grease is manufactured with the ingredients of soap and mineral oils. Different types of grease are manufactured for specific applications under different commercial names. So, it is necessary to know the specific type of grease to be applied for the specific part.

10.6 Methods of lubrication

The different methods of lubrication are

1. Ring lubrication
2. Wick lubrication
3. Splash lubrication
4. Grease lubrication

10.6.1 Ring lubrication

The method of ring lubrication involves a ring hanging from down the rotating shaft. The bottom portion of the ring is immersed in the oil container. When the shaft starts rotating, the ring also rotates. While the ring rotates, it carries a small amount of oil and the oil is spread into the bearing and the shaft. *Fig.10.1 illustrates ring lubrication.*

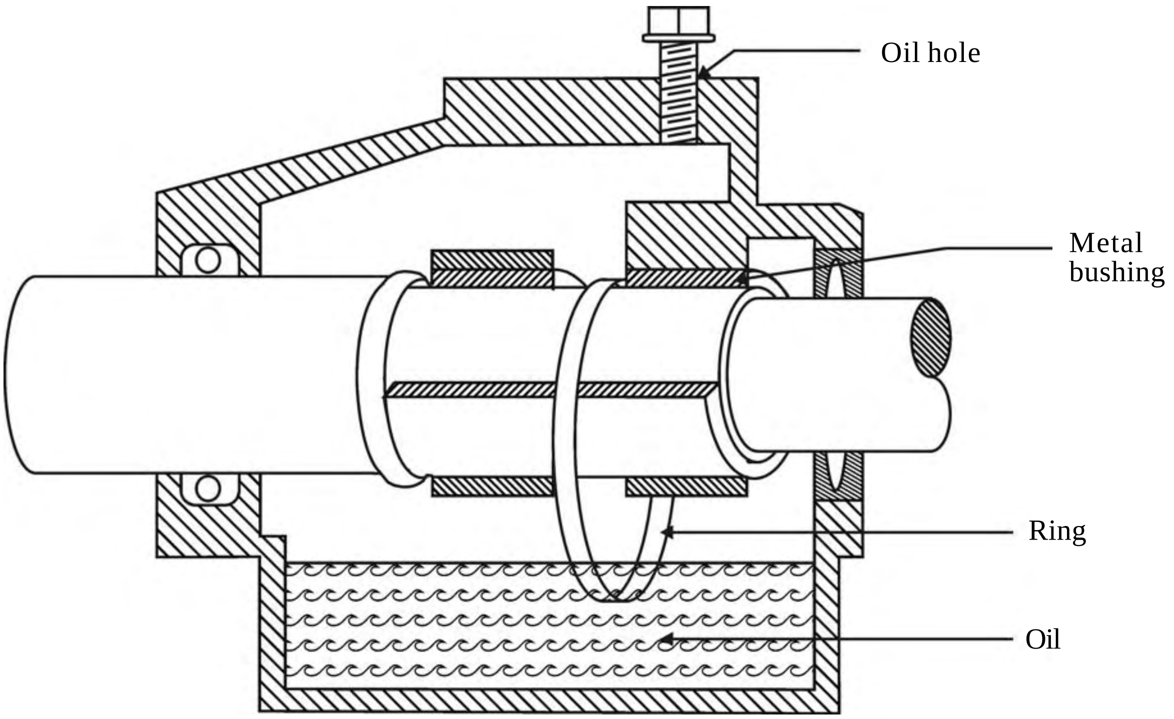

Fig. 10.1 Ring lubrication

10.6.2 Wick lubrication

Wick lubrication is a method in which the wick along with a flexible thin piece of metal is used. A container having oil is placed above the bearing. The wick connects the container and the part to be lubricated. This lubrication enables the oil to flow from the container to the required place. *Wick lubrication is illustrated in Fig. 10.2.*

10.6.3 Splash lubrication

The rotating part of the machine itself is made to be immersed in the oil container. When the part starts rotating, the oil is splashed and the moving parts are lubricated. Bearings are generally lubricated by this method. Little spoons are attached to the rotating parts to get more quantity of oil to the part to be lubricated.

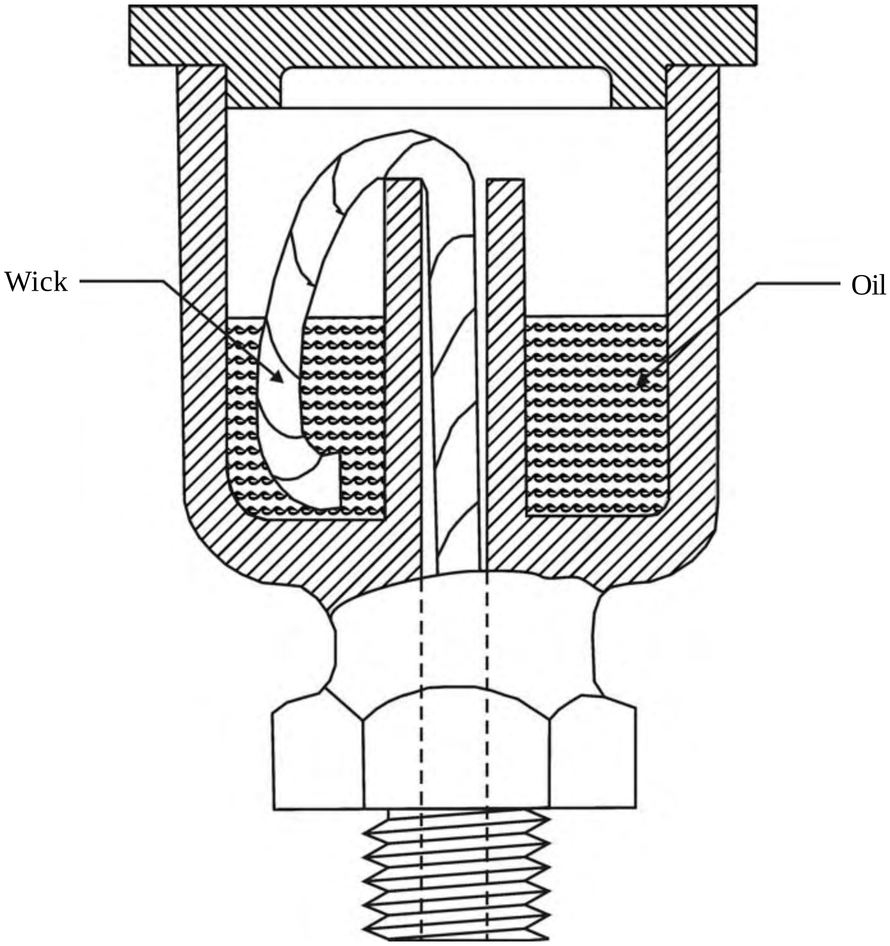

Fig. 10.2 Wick lubrication

10.6.4 Grease lubrication

Grease lubrication is done with the help of grease guns. Another way of doing it simply is to fill a container with grease and the container is connected to the parts to be lubricated by means of a small tube. When a screw is screwed into the container, a good amount of grease is taken to the required place. *Fig. 10.3 shows a grease gun.*

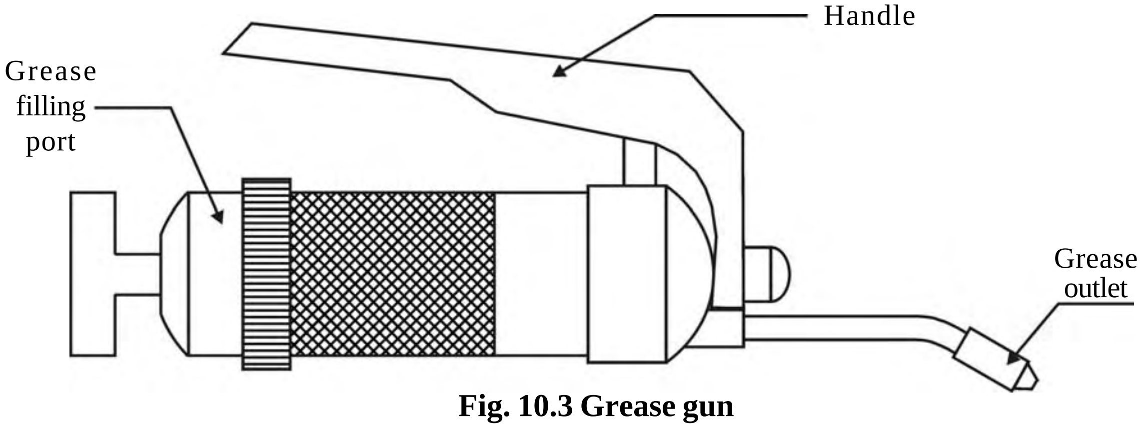

Fig. 10.3 Grease gun

Lubricating oil and grease are manufactured under several trade names by the Indian oil companies. Suitable lubricants are used for specific purposes.

10.7 Central maintenance department

The primary aim of maintenance department is to ensure the machine tools, instruments, tools and accessories in good working conditions. More maintenance attention is needed when the work load increases. If the machines are maintained properly, we can lookout for more production.

Separate maintenance department will be functioning in major machine shops and industries. Experienced engineers, supervisors, technicians will be working in this department. Separate equipments and instruments will be used in the department.

10.8 Types of maintenance

There are different types of maintenance and they are

1. Routine maintenance
   a. Daily maintenance
   b. Weekly maintenance
2. Preventive maintenance
3. Breakdown maintenance
4. Capital repairs or Corrective maintenance

10.8.1 Routine maintenance

Routine maintenance is done to avoid unnecessary breakdown of machine tools. It involves regular works like cleaning and lubricating, making minor adjustments and doing small repair works.

It is important to chart out what are all to be done daily, weekly and monthly.

Daily maintenance

1. Cleaning all the parts of the machine tool
2. Lubricating the movable parts with grease and oil as per requirements
3. To correct the machine tool to make it operate accurately
4. To look at whether the coolant supply and auto lubricating equipments are working properly
5. To remove the burrs cleanly

Weekly maintenance

1. The measuring instruments, gauges and hand tools are checked and corrected if necessary.
2. The spare parts and integral parts of the machine tools should be cleaned.
3. The entire workshop premises should be maintained cleanly.
4. Grinding wheels of bench grinders and tool and cutter grinders should be dressed. The work rests of these machines should be adjusted properly.
5. The protective devices in the machine tool are checked whether they are properly fixed. And they are corrected if necessary.
6. The cables and electrical connections should be checked.
7. The position and working of belt, chain etc., are checked and adjusted.
8. Parts like gears, clutches and bearings are checked for their proper functioning.
9. The accuracy of precision measuring instruments are checked and corrected. They are also checked for zero error.

10.8.2 Preventive maintenance

In order to avoid sudden breakdown of machine tools and major repairs, a complete maintenance programme is charted out. This will ensure that there is no slip in the rate of production.

In case of any major breakdown to the machine tool, two types of losses are incurred to the management.

1. Direct losses
2. Indirect losses

Direct loss is the expenditure incurred for repairing the machine tools and getting them back in action.

Indirect losses happen by the loss of income for the disturbed production. The management has to pay the labourers their wages. It will also be earning a bad name due to non - deliverance of the products to its customers. So, it is necessary to plan the preventive maintenance program to avoid such losses.

Even if the machine tools are working in proper conditions, it is better to stop production once in a while to make the necessary repairs and adjustments. Certain parts should be replaced if necessary.

10.8.3 Breakdown maintenance

Even after enforcing routine maintenance and preventive maintenance, there are chances that some machine parts may fail due to some reason or other. In order to bring back the machine to its original working condition, some minor or major repairs are needed to be done. This type of maintenance is known as breakdown maintenance.

10.8.4 Corrective maintenance

Even if the machine is functioning properly, it is necessary to halt the functioning of the machine to do some major repair once is a year. To do that, the machine parts are to be dissembled completely and worn out parts are replaced. Some parts of the machine may be in a condition that they need to be replaced soon. To correct all such difficulties, the machine is stopped from functioning to do all and every repairs to bring back the machine to accurate machining conditions. This called as corrective maintenance.

10.9 Planned maintenance programme

The main objective of planned maintenance programme is to increase the production by keeping the machine tools always ready in good condition. It is done by keeping the machine tools to perform all the activities correctly with the required accuracy at desired speed with full safety protection.

The planned maintenance programme is to be prepared and executed as follows.

1. When a new machine tool arrives to the machine shop or the existing machine tools are to be replaced, it is required to install the machine tools properly, level and align them correctly and connect them to the electrical terminals safely.

2. If errors are found in the dimensional accuracy, the errors should be recorded and analysed whether the machine is in bad condition.

3. It is necessary to plan and get ready the materials, spares and tools required for the maintenance in advance so that the maintenance work is carried out in time.

4. The operators and supervisors should know the importance of the cutting speed, feed data of the machine tools.

5. Emergency repair works should be done without any delay in the case of breakdown of any of the machine tools.

6. The machine should be overhauled if the working efficiency of the machine tool goes below a particular level.

7. If the machine tools become very old and not performing to the desired level, it has to be dismantled completely and worn out parts should be replaced to bring it to the normal working condition.

8. The following details should be prepared and made as charts : the layout plan of the shop, the size and specification of the machine tools and the parts to be lubricated. The manuals and the list of spare parts of all the machine tools are also to be kept ready.

9. Annual budget for the maintenance work should be prepared atleast six months or one year in advance.

10.10 Materials and instruments needed for doing maintenance

1. Steel rule
2. Try-square
3. Calipers
4. Micrometer
5. Vernier calipers
6. Gauges
7. Vice
8. Files
9. Tap & Die
10. Spanner set
11. Hammers
12. Screw drivers
13. Wrenches
14. Hacksaw frame & blades
15. Lubricating devices
16. Emery sheets
17. Scraper

QUESTIONS

I. Answer the following questions in one or two words

1. Name any one method of lubrication.
2. Name any two instruments required for doing maintenance.

II. Answer the following questions in one or two sentences

1. What is direct loss?
2. What do you mean by indirect loss?
3. What is machine tool maintenance?
4. What is the objective of maintenance?
5. What are the types of maintenance?
6. What is preventive maintenance?
7. What is ‘wear’?
8. What is backlash?
9. What is breakdown maintenance?
10. Define - ‘Corrective maintenance’.
11. What is lubrication?
12. What are the parts which need to be lubricated?

III. Answer the following questions in about a page

1. What are the objectives of lubrication?
2. Explain ‘Ring lubication’ with a diagram.
3. Explain ‘Wick lubrication’ with a diagram.
4. ‘Grease lubrication’ - Explain.
5. Explain ‘Routine maintenance’.
6. Explain ‘Planned maintenance programme’.

QUESTION PAPER BLUE PRINT

Sl. No.	Title	Question allotment					Total
		Part - I		Part - II	Part - III	Part - IV	
		1 mark		4 marks	10 marks	20 marks	
		Objective	1 or 2 words				
1	Lathe	2	2	2	1	1	
2	Drilling machine	2	2	2	1	1	
3	Shaping machine	2	2	2	-	1	
4	Grinding machine	2	2	2	-	1	
5	Milling machine	2	2	2	1	1	
6	Hydraulic equipments	1	1	1	1	-	
7	Electrical equipments	1	1	1	1	-	
8	Welding	1	1	1	-	1	
9	CNC Machines	1	1	1	1	-	
10	Machine tool maintenance	1	1	1	1	-	
	Total questions	15	15	15	7	6	
	Marks	15x1=15	15x1=15	10 x 4 = 40	5 x 10 = 50	4 x 20 = 80	200

MODEL QUESTION PAPER

GENERAL MACHINIST

Time alloted : 3 hours *Maximum marks : 200*

Part - I **30 x 1 = 30**

A. Choose the correct option

1. Lathe was first developed by
   a. Henry Maudslay b. Eli Whitney
   c. James Nasmith d. Michael Faraday

2.Turret and capstan lathes are classified under
   a. automatic lathes b. semi-automatic lathes
   c. bench lathe d. tool room lathe

3. The lip clearance angle of a drill is
   a. 59° b. 118° c. 12° to 15° d. 180°

4. Reamer is a
   a. multi point cutting tool b. single point cutting tool
   c. parting tool d. saw teeth cutting tool

5. The part involved in reciprocation by quick return is
   a. table b. ram c. column d. crossrail

6. The mechanism used to move the shaper table automatically is
   a. back gear mechanism b. crank & slotted link mechanism
   c. tumbler gear mechanism d. ratchet & pawl mechanism

7. The heat generated during dry grinding will be
   a. 2000°C b.20°C c. 1000°C d. 1200°C

8. Bond used for making elastic grinding wheel is
   a. vitrified b. silicate c. shellac d. resinoid

9. The amount of table travel a milling machine is controlled by
   a. saddle b. trip dogs c. cross-slide d. elevating screw

10. The distance travelled by a point on a milling cutter in one minute is known as
   a. cutting speed b. depth of cut c. spindle speed d. feed

11. Impeller is a part found in
   a. reciprocating pump b. gear pump
   c. centrifugal pump d. vane pump

12. Starter used for motors of capacity upto 5 hp is

a. star – delta starter
b. Direct – on – line starter
c. auto transformer starter
d. rotor resistance starter

13. Atomic hydrogen welding is a ----------- process

a. gas welding
b. resistance welding
c. arc welding
d. solid state welding

14. Transducers are

a. feedback devices
b. memory unit
c. output channels
d. processors

15. Maintenance done once a year is known as

a. breakdown maintenance
b. routine maintenance
c. corrective maintenance
d. preventive maintenance

B. Answer the following questions in one or two words

16. Name a device useful in holding a long workpiece.
17. Name the operation performed in a lathe by offsetting the tailstock.
18. Name the groove present on the drill.
19. Name the device useful in holding a cylindrical workpiece on drilling machine table.
20. What type of surfaces are machined on a shaper?
21. Which part of the shaper is involved in automatic lifting of the tool during the return stroke of the ram?
22. Name one artificial abrasive.
23. Name the grinding machine used for grinding jigs, fixtures and tools.
24. What is the base of a milling machine made of ?
25. Name the part which holds the other end of the arbor in a milling machine.
26. Which type of pump is a vane pump?
27. Name the windings present in the A.C. single phase capacitor start motor.
28. Which type of welding require filler rods?
29. What are the numbers used in binary format of numbering?
30. Name any one method of lubrication.

Part - II   10 x 4 = 40

Answer any ten questions in one or two sentences

31. What are the important parts of a lathe?
32. What is swing diameter in a lathe?

33. Define ‘cutting speed’ in a drilling machine.

34. State any two differences between the processes of reaming and boring.

35. What is the use of swivel toolhead of a shaping machine?

36. Name any two points in specifying the size of a shaping machine.

37. What is centreless grinding?

38. What is glazing?

39. What is milling?

40. What is the use of indexing head?

41. Mention the types of hydraulic pumps.

42. What are the safety devices fitted in starters to protect the induction motors?

43. What are the types of electrodes?

44. What is Machine Control Unit?

45. What is the objective of maintenance?

Part - III   5 x 10 = 50

Answer any five questions in about a page

46. List out the types of lathe.

47. Explain any two drill holding devices.

48. What are the differences between a plain milling machine and a universal milling machine?

49. Draw the circuit of a hydraulic shaper and label its parts.

50. Draw and explain a D.O.L starter.

51. Explain (i) software (ii) input media.

52. Explain ‘Ring lubrication’ with a diagram.

Part - D   4 x 20 = 80

Answer any four questions in detail

53. Explain the back gear arrangement with a diagram.

54. Explain any four operations performed in a drilling machine.

55. Explain the crank & slotted link mechanism of quick return of the ram with a diagram.

56. Draw and explain a external cylindrical grinder.

57. Explain any four cutter holding devices in a milling machine with diagrams.

58. Explain resistance welding with a diagram.